TOWN OF MAMARONECK
TOWN BOARD AGENDA
WEDNESDAY, JUNE 15, 2016

THE TOWN BOARD WILL CONVENE – at 5:00 PM, In **Conference Room A** to discuss:

1. Update – Westchester County Contracts – Nutrition & Transportation
2. Discussion – Technology Repairs/Updates
3. Discussion – Rock Removal Law
4. Update – Private Roads
5. Update – Westchester Joint Water Works Project – Macy Road Water Main
6. Floor Area Ratio Review
7. New Business

8:00PM CALL TO ORDER – COURTROOM
SUPERVISOR'S SUMMARY REPORT
CITIZEN COMMENTS
PUBLIC HEARING - 1. Correction of an Omission to the Residential Site Plan Law
CONTINUED PUBLIC DISCUSSION – Purchase of Veterans of Foreign War Building

BOARD OF FIRE COMMISSIONERS

1. Fire Claims
2. Other Fire Department Business

AFFAIRS OF THE TOWN OF MAMARONECK

1. Authorization – Bonding Resolution – Purchase of VFW Building
2. Authorization – Contract of Purchase VFW Building
3. Authorization – Transfer of Funds – Technology Repairs/Updates
4. Set Public Hearing – Water District Project – Macy Road Water Main
5. Authorization – Transfer of Funds – Spring Tree Planting Program
6. Authorization – Emergency Notification System Contract
7. Resolution – Establish Parking Fees – Baldwin Avenue
8. Resolution – Discontinuation of Hunting & Fishing Licenses
9. Consideration of Certiorari

APPROVAL OF MINUTES – May 18, 2016
REPORTS OF THE COUNCIL
TOWN CLERK'S REPORT
NEXT REGULARLY SCHEDULED MEETINGS – July 18, 2016 & August 8, 2016

Any physically handicapped person needing special assistance in order to attend the meeting should call the Town Administrator's office at 381-7810.

WORKSESSION
ITEM 1

Memo

Date: June 8, 2016

To: Stephen V. Altieri, Town Administrator

From: Anna Danoy, Director of Community Services and Housing ADanoy

Re: 2016 Contracts from Westchester County Department of Senior Programs and Services (DSPS)

Westchester County DSPS recently mailed out contracts to be completed and executed for the following programs, totaling $97,719:

Federal Funds:	III B Transportation	$ 8,172
	III C-1 Nutrition	$17,608
	Nutrition Services Incentive Program IIIC-1	$ 7,446
	III C-2 Home Delivered Meals	$42,032
	Nutrition Services Incentive Program IIIC-2	$20,736
State Funds:	NYS AAA Transportation Program	$ 1,725

In reviewing the contract documents, I noticed that the wording of the III B Transportation Agreement between the County of Westchester and the Town of Mamaroneck was completely revised from previous years. I met with Bill Maker on 5/20/16 to review and discuss these changes. A copy of the Agreement is attached; I have highlighted these sections for your consideration:

Page 5 Item 6 (continued onto pages 6 and 7):
By signing the Agreement, the Town of Mamaroneck assumes responsibility for abiding by each and every Federal and State Statute, Regulation and Policy cited, as well as any that may have been omitted. While the Town of Mamaroneck endeavors to comply with all relevant statues, etc. this is the first such contract that itemizes each applicable regulation.

Page 11 Item 19:
The Town has received authorization from the County in the past to purchase equipment with unspent grant funds. There has been no previous language stating that the Town has no ownership of said equipment and that it may be required to be turned over to the County. Items purchased include steam table for the Senior Nutrition Program, shelving and carry bags for the Home Delivered Meals program, and the Ford Transit vehicle used for transportation of seniors.

Although we cannot make changes to these grant documents, I wanted you to be aware of this new wording. If the Town Board agrees to move forward with the contracts, they will be made available for your signature following the 6/15/16 Board Meeting.

THIS AGREEMENT made this 1st day of January, 2016 by and between:

THE COUNTY OF WESTCHESTER, a municipal corporation of the State of New York, having an office and place of business in the Michaelian Office Building, 148 Martine Avenue, White Plains, New York, 10601 (hereinafter referred to as the "County")

and

the Town of Mamaroneck

a municipal corporation organized under the laws of the State of New York, having an office and principal place of business at 740 W. Boston Post Road

Mamaroneck, NY 10543

(hereinafter referred to as the "Contractor")

WITNESSETH:

WHEREAS, the County has been awarded a grant by the New York State Office for the Aging pursuant to Title III-B of the Older Americans Act to provide Nutrition Site Transportation and Supportive Services Transportation to elderly residents of the County (the "Program"); and

WHEREAS, the Contractor desires to perform said services upon the terms and conditions hereinafter set forth, and the County desires the Contractor to perform said services upon such terms and conditions.

NOW, THEREFORE, in consideration of the terms, conditions, covenants, and agreements contained herein, the parties agree as follows:

1. The Contractor shall provide the Program, as more particularly described in Schedule "B," which is attached hereto and made a part hereof (the "Work"). The Contractor shall also comply with the terms in Schedule "A," which is attached hereto and made a part hereof. All Work must be performed in accordance with the terms of the approved Standard Assurances in the Four Year Plan and Annual Implementation Plan (collectively the "Plan) attached hereto and made a part hereof in the form of Schedule "C." It is expressly understood and agreed by the parties hereto that all schedules to this Agreement are subject to the approval of and modification by the New York State Office for the Aging ("NYSOFA") and the County, as necessary.

The Contractor warranties that services shall be provided in an accurate and timely manner without interruption, failure or error due to inaccuracy of the service's or product's operations in processing date/time data (including but not limited to calculating, comparing, and sequencing) various time/date transitions including leap year calculations. The Contractor accepts responsibility for damages resulting from any delays, errors or untimely performances resulting therefrom, including but not limited

to the failure or untimely performance of such services.

In the event of any conflict between the terms of this Agreement, it is understood that the following order of precedence shall be controlling with respect to any interpretation of the meaning and intent of the parties:

oo. This Agreement
pp. Schedule "B" to this Agreement
qq. Schedule "A" to this Agreement
rr. Schedule "C" to this Agreement
ss. All other schedules to this Agreement

2. For the Work to be performed pursuant to Paragraph "1," the Contractor shall be paid an amount not to exceed $8,172.00, payable on a monthly basis, at the unit cost amount indicated in Schedule "B" for actual services provided as data entered in the Social Assistance Management System ("SAMS") or other NYSOFA approved electronic reporting system, after the County has received approval from NYSOFA and the County has received any and all supporting documentation the County may require and the same has been approved by the Commissioner of the Department of Senior Programs and Services or her duly authorized designee (the "Commissioner").

The County may, in its discretion, if it shall deem such payment to be required in furtherance of the Program, pay the Contractor prior to receipt of payment or approval therefore by NYSOFA, provided that, in the event NYSOFA subsequently fails or refuses to pay the County, or if such expense is not a proper expenditure under the Program, the Contractor shall reimburse the County for such payment made to the Contractor, or, the County, in its discretion, may deduct such amount from future payments due and owing the Contractor under this Agreement.

The Contractor shall contribute $5,679.00 to the Work, as a match.

Any and all requests for payment to be made, including any requests for partial payment made in proportion to the Work completed, shall be submitted by the Contractor on properly executed payment vouchers of the County and paid only after approval by the Commissioner. All payment vouchers must be accompanied by a numbered invoice and/or the appropriate required back-up documentation approved by the Department of Senior Programs and Services. All invoices submitted during each calendar year shall utilize consecutive numbering and be non-repeating. In no event shall final payment be made to the Contractor prior to the completion of all services, the submission of reports and the approval of same by the Commissioner.

The Contractor shall, at no additional charge, furnish all labor, services, materials, goods, equipment and any other things necessary to complete the Work, unless specific additional charges are expressly permitted under this Agreement. It is recognized and understood that even if specific additional charges are expressly permitted under this Agreement, in no event shall total payment to the Contractor exceed the not-to-exceed amount set forth above.

Except as otherwise expressly stated in this Agreement, no payment shall be made by the County to the Contractor for out of pocket expenses or disbursements made in connection with the services rendered or the work to be performed hereunder.

3. Prior to the making of any payments hereunder, the County may, at its option, audit such books and records of the Contractor as are reasonably pertinent to this Agreement to substantiate the basis for payment. The County will not withhold payment pursuant to this paragraph for more than thirty (30) days after payment would otherwise be due pursuant to the provisions of this Agreement, unless the County shall find cause to withhold payment in the course of such audit or the Contractor fails to cooperate with such audit. The County shall, in addition, have the right to audit such books and records subsequent to payment, if such audit is commenced within one year following termination of this Agreement.

In addition to any general audit rights to which the County may be entitled hereunder, the County also reserves the right to audit the Contractor's performance under this Agreement. Such audit may include requests for documentation or other information which the Commissioner may, in her discretion, deem necessary and appropriate to verify the information provided by the Contractor as required by Paragraph "4." The County may also make site visits to the location(s) where the services to be provided under this Agreement are performed in order to review Contractor's records, observe the performance of services and/or to conduct interviews of staff and patrons, where appropriate and not otherwise prohibited by law.

The Contractor agrees to maintain appropriate records and to retain them for at least six years after final payment is made. The Contractor agrees to provide access to all books, documents and all pertinent materials related to the contract for examination to authorized representatives of the Administration on Aging/Administration for Community Living (AoA/ACL) of the United States Department of Health and Human Services ("HHS"), the New York State Comptroller or his representatives, staff of NYSOFA, and/or the County.

4. The term of this Agreement shall commence on January 1, 2016 and expire on December 31, 2016, unless terminated sooner pursuant to the provisions hereof.

The Contractor shall report to the County on its progress toward completing the Work, as the Commissioner may request, and shall immediately inform the Commissioner in writing of any cause for delay in the performance of its obligations under this Agreement.

5. The parties recognize and acknowledge that the obligations of the County under this

Agreement are subject to the County's receipt of funds from NYSOFA to operate the Program, and that no liability shall be incurred by the County beyond the monies made available from NYSOFA for this Agreement. The Contractor agrees that the County shall not be liable for any of the payments hereunder unless and until the County Commissioner of Finance has received said funds or said funds have been made available to said commissioner.

If, for any reason, the full amount of said funds is not paid over or made available to the County by NYSOFA, the County may terminate this Agreement immediately or reduce the amount payable to the Contractor, in the discretion of the County. The County shall give prompt notice of any such termination or reduction to the Contractor. If the County subsequently offers to pay a reduced amount to the Contractor, then the Contractor shall have the right to terminate this Agreement upon reasonable prior written notice.

In addition, the parties recognize and acknowledge that the obligations of the County under this Agreement are subject to annual appropriations by its Board of Legislators pursuant to the Laws of Westchester County. Therefore, this Agreement shall be deemed executory only to the extent of the monies appropriated and available. The County shall have no liability under this Agreement beyond funds appropriated and available for payment pursuant to this Agreement. The parties understand and intend that the obligation of the County hereunder shall constitute a current expense of the County and shall not in any way be construed to be a debt of the County in contravention of any applicable constitutional or statutory limitations or requirements concerning the creation of indebtedness by the County, nor shall anything contained in this Agreement constitute a pledge of the general tax revenues, funds or moneys of the County. The County shall pay amounts due under this Agreement exclusively from legally available funds appropriated for this purpose. The County shall retain the right, upon the occurrence of the adoption of any County Budget by its Board of Legislators during the term of this Agreement or any amendments thereto, and for a reasonable period of time after such adoption(s), to conduct an analysis of the impacts of any such County Budget on County finances. After such analysis, the County shall retain the right to either terminate this Agreement or to renegotiate the amounts and rates set forth herein. If the County subsequently offers to pay a reduced amount to the Contractor, then the Contractor shall have the right to terminate this Agreement upon reasonable prior written notice.

This Agreement is also subject to further financial analysis of the impact of any New York State Budget (the "State Budget") proposed and adopted during the term of this Agreement. The County shall retain the right, upon the occurrence of any release by the Governor of a proposed State Budget and/or the adoption of a State Budget or any amendments thereto, and for a reasonable period of time after such release(s) or adoption(s), to conduct an analysis of the impacts of any such State Budget on County finances. After such analysis, the County shall retain the right to either terminate this Agreement or to

renegotiate the amounts and rates approved herein. If the County subsequently offers to pay a reduced amount to the Contractor, then the Contractor shall have the right to terminate this Agreement upon reasonable prior written notice.

6. The Contractor shall comply, at its own expense, with the provisions of all applicable Federal, State and local laws, regulations, rules, executive orders, policies, orders, notices, and related guidance, as such provisions may be amended from time to time, (such Federal provisions being "Federal Requirements"), including, but not limited to:

Federal Statutes, Regulations, and Policies

The Older Americans Act (OAA) of 1965, as amended *(42 U.S.C. 3001 et. seq.)*
2 CFR Part 200 *(Uniform Administrative Requirements, Cost Principles, and Audit Requirements for Federal Awards)*
2 CFR Part 230 *(Cost Principles for Non-Profit Organizations)*
2 CFR Part 376 *(Nonprocurement Debarment and Suspension)*
20 CFR Part 641 *(Provisions Governing the Senior Community Service Employment Program)*
29 CFR Part 37 *(Implementation of the Nondiscrimination and Equal Opportunity Provisions of the Workforce Investment Act of 1998)*
45 CFR Part 75 *(Uniform Administrative Requirements, Cost Principles, and Audit Requirements for HHS Awards)*
45 CFR Part 80 *(Nondiscrimination under Programs Receiving Federal Assistance Through the Department of Health of Health and Human Services Effectuation of Title VI of the Civil Rights Act of 1964)*
45 CFR Part 84 *(Nondiscrimination on the basis of Handicap)*
45 CFR Part 93 *(New Restrictions on Lobbying, see 91-PI-5 [1/24/91])*
45 CFR Part 1321, Subparts A-D *(Grants to State and Community Programs on Aging)*
Age Discrimination in Employment Act of 1975, as amended *(29 U.S.C .621, et seq.)* Americans with Disabilities Act of 1990 *(42 U.S.C. 12101, et seq.; see 92-PI-32 [8/4/92])*
Civil Rights Act of 1964, Title VI, as amended *(42 U.S.C. 2000-d et. seq.)*
Equal Employment Opportunity Act of 1972 *(42 U.S.C. 2000e, et seq.)*
Equal Pay Act of 1963, as amended *(29 U.S.C. 206)*
Hatch Act *(5 U.S.C. 1501, et seq.)*
Home Energy Assistance Act of 1981, as amended *(42 U.S.C. 8601, et seq.)*
Rehabilitation Act of 1973, Sec. 504 *(29 U.S.C. 794, Nondiscrimination)*
Single Audit Act Amendments of 1996 *(31 U.S.C. 7501, et seq.)*
Uniform Relocation and Assistance and Real Property Acquisitions Act of 1970 *(42 U.S.C. 4601 et seq.)*
Office of Management and Budget (OMB):
OMB Circular A-95 *(Clearinghouse Review)*
OMB Circular A-102 *(Uniform Administrative Requirements for Grants and Cooperative Agreements with State and Local Governments)*
OMB Circular A-122 *(Cost Principles for Non-profit Organizations)*
OMB Circular A-133 *(Audits of State and Local Government and Non-Profit Organizations)*
Federal Executive Order 11246, as Amended by Executive Order 11375 *(Affirmative Action)*; as Amended by Executive Order 12086 *(Consolidation of Compliance Functions)*; and as Amended by Executive Order 13279 *(Equal Protection for Faith-Based and Community Organizations.)* OFA No.32 Rev (09/15)

Executive Order 13166 *(Improving Access to Services for Persons with Limited English Proficiency)*
HHS Grants Policy Statement

State Statutes, Regulations, and Policies
New York State Elder Law
New York State Office for the Aging Rules and Regulations *(9 NYCRR Parts 6651, 6652, 6653, 6654, 6655 and 6656)*
Executive Law, Article 15 *(State Human Rights Law Prohibiting Discrimination Based on* Race, Color, Creed, National Origin, Sex, Age, Disability, Sexual Orientation *and Other Factors)*
Public Officers Law *(Defense and indemnification of representatives of the State Long-Term Care Ombudsman Program)*
Executive Law, Article 7-A *(Registration and reporting provisions required of Charitable Organizations)*
Expanded In-home Services for the Elderly (EISEP) Program Standards (87-PI-66 [10/21/87])
NYSOFA Nutrition Program Standards *(90-PI-26 [5/17/90])*
Legal Assistance Standards *(94-PI-52 [12/29/94])*
Equal Access to Services and Targeting Policy *(12-PI-08)*

In addition, the Contractor shall cause to be prominently posted, on the site where services hereunder are to be provided, a statement regarding non-discrimination, which statement shall be similar in form to the following:

> "In compliance with Section 504 of the Rehabilitation Act of 1975 and Title VI of the 1964 Civil Rights Act and New York State Executive Law and orders, no persons will be denied service or access to service based upon race, creed, color, national origin, religion, marital status, sexual orientation, genetic predisposition, carrier status, or handicapping condition."

Without limiting any of the foregoing, the Contractor specifically agrees to the following:

(a) Regarding access to records and access to sites where the Work is performed:

i.) In compliance with 45 C.F.R. 75.364(a), the Contractor agrees to provide the County, HHS and its awarding agency, the Comptroller General of the United States, any inspectors general, or any of the duly authorized representatives of any of these listed parties, access to any documents, papers, or other records which are pertinent to this Agreement in order to make audits, examinations, excerpts, and transcripts, as well as provide timely and reasonable access to the Contractor's personnel for the purpose of interview and discussion related to such documents. The Contractor agrees to allow the above-listed parties to reproduce, excerpt, and/or transcribe such documents, papers, and other records by any means whatsoever. The Contractor also agrees to allow the above-listed parties such other access to records as may be necessary for compliance with applicable Federal Requirements.

ii.) In accordance with 45 C.F.R. 75.364(c), all of the above-described rights of access to records shall last for as long as the records are retained by the Contractor. The Contractor shall retain all such records for at least as long as is required under 45 C.F.R. 75.361.

iii.) In compliance with 45 C.F.R. § 75.342(e), the Contractor agrees to permit HHS to make site visits as needed.

(b) Regarding recovered materials:

i.) The Contractor agrees to comply with all applicable requirements of 45 C.F.R. 75.331; Section 6002 of the Solid Waste Disposal Act, as amended by the Resource Conservation and Recovery Act and as further amended (42 U.S.C. § 6962); 40 C.F.R. Part 247, the United States Environmental Protection Agency's "Comprehensive Procurement Guideline for Products Containing Recovered Materials"; and Executive Order 12873.

(c) Regarding the procurement of subcontracts finance in whole or in part with the Funds:

i.) The Contractor agrees to comply with 45 C.F.R. 75.330 in procuring any subcontract financed in whole or in part with the Funds.

(d) The Contractor agrees to comply with and/or assist the County in complying with any and all applicable requirements of HHS.

The Contractor hereby represents and warrants that it has all information it needs regarding the Federal Requirements concerning reporting, patent rights, copyrights, and rights in data, and the Contractor understands and acknowledges that all such requirements and regulations are hereby incorporated into this Agreement by reference, and shall prevail over any conflicting term(s) of this Agreement.

The Contractor understands that the County has relied upon all materials and representations it has provided to the County concerning the Work and this Agreement in, a.) considering, among other things, whether the Contractor is capable of successfully performing under the terms and conditions of this Agreement; the Contractor's integrity and ethics; whether executing this Agreement with the Contractor is in compliance with public policy; the Contractor's record of past performance; and the Contractor's financial, administrative, and technical resources and capacity, b.) consequently determining that the Contractor is a responsible contractor, and c.) awarding this Agreement to the Contractor.

It is the intent and understanding of the County and Contractor that each and every provision required by law, contract, or other proper authority to be included in this agreement shall, for all intents and purposes, be considered and deemed included herein. The Contractor understands and acknowledges that for each and every such provision that has, through mistake or otherwise, either not been inserted in writing or been inserted in writing in an incorrect form, the Contractor hereby consents to amending this agreement in writing, upon receipt of notice from the County, for the purpose of inserting or correcting the provision in question.

7. The Contractor expressly agrees neither it nor any contractor, subcontractor, employee or any other person acting on its behalf shall discriminate against or intimidate any employee or other individual on the basis of race, creed, religion, color, gender, age, national origin, ethnicity, alienage or citizenship

status, disability, marital status, sexual orientation, familial status, genetic predisposition or carrier status during the term of or in connection with this Agreement, as those terms may be defined in Chapter 700 of the Laws of Westchester County or Section 291 of the New York State Human Rights Law. The Contractor acknowledges and understands that the County maintains a zero tolerance policy prohibiting all forms of harassment or discrimination against its employees by co-workers, supervisors, vendors, contractors, or others.

8. (a) There shall be no partisan political activity in connection with this Agreement, including (i) candidate endorsements (ii) registration activities which are partisan in nature (iii) scheduled meetings of services recipients with public officials or candidates unless event is open on an equal basis to all candidates and officials regardless of policy views or partisan affiliation. This does not preclude the legitimate right of elected officials and other community leaders to visit programs in their areas.

(b) The Contractor shall refrain and prevent the use by others under its control of official authority, influence or coercion to interfere with or affect elections or nominations for political office.

(c) The Contractor shall refrain from and prohibit any others receiving funds under this Agreement from attempting to coerce or advise other persons to contribute anything of value to a party, committee, organization, agency or person for political purposes, nor engage in any other partisan activities under its auspices. The Contractor shall refrain from using funds to advance any partisan effort.

(d) The Contractor shall ensure that any services to be provided under this Application shall be secular in nature and scope and in no event shall there be any sectarian or religious services, counseling, proselytizing, instruction or other sectarian, religious influence undertaken in connection with the provision of such services. The Contractor shall refrain from using funds to advance any sectarian effort.

9. (a) The Contractor acknowledges (i) that this Agreement may be funded in whole or in part with funds to be provided to the County under State or Federal program grants, (ii) that the County cannot insure that all of such funds as are presently earmarked by the County for use in connection with this Agreement will ultimately be delivered to the County by the relevant grantor, and (iii) that the County's obligation to pay the Contractor for expenditures which are to be reimbursed with such funds extends only to the extent that such funds are actually received by the County.

(b) The County shall have the right to terminate or modify this agreement based on changes in the availability of State and/or Federal Funds.

10. (a) As a material element of this Agreement, the Contractor agrees to fully comply with the provisions required by NYSOFA concerning equal access to services, non-discrimination and concentration of services on target populations, as more fully set forth in the Plan.

(b) Attached hereto and forming a part of Schedule "A" is the "Participant Contribution Standards." The Contractor shall provide participants an opportunity to voluntarily contribute to the cost of the service received, as appropriate. The Contractor shall use all collected contributions to expand the service for which the contributions were given to supplement the funds received under the Older Americans Act (OAA).

(c) The Contractor shall assist participants in taking advantage of benefits under other programs and assure that the services provided are coordinated and do not unnecessarily duplicate services provide by other sources.

11. Statistical information and supporting documentation concerning the Work conducted hereunder shall be provided to the County by the Contractor on request of the County.

The Contractor shall provide the County with timely information needed to satisfy reporting requirements as specified by NYSOFA. Documentation of reports and expenses shall include, without limiting the right to require additional documentation: invoices for all purchases, payroll time records, payroll records for local support contribution, municipal payment vouchers for governmental agencies and canceled checks for private agencies, as required.

The Programmatic monthly reporting system for Service Delivery Information and Service Recipient Information must be submitted electronically in SAMS or other NYSOFA approved electronic reporting system. The Department of Senior Programs and Services will notify those contractors that are exempt from submitting their reports through SAMS. Until further notice, all Contractors are required to mail in the SAMS MONTHLY ELECTRONIC PAPER REPORT and/or other approved reporting measure, signed by the staff member responsible for the report. The reports should be received by the County no later than the tenth (10th) day of the following month and/or entered on the website at the same time. The Contractor understands and agrees that submission of the monthly report by the deadline set forth above constitutes a material element of this Agreement. The County reserves the right to withhold payment to Contractor for its failure to submit the monthly report by the deadline, until such time as the monthly report is received by the County. Repeated failures by Contractor to submit the monthly report by the stated deadline will constitute a material breach of this Agreement justifying termination for cause as provided in Paragraph "17" hereof.

The Contractor shall furnish the County with copies of all insurance certificates, food contracts,

rental agreements, and transportation agreements relating to the services provided by the Contractor hereunder, as applicable.

12. The Contractor agrees to procure and maintain insurance naming the County as additional insured, as provided and described in Schedule "A," entitled "Standard Insurance Provisions," which is attached hereto and made a part hereof. In addition to, and not in limitation of, the insurance provisions contained in Schedule "A," the Contractor agrees:

(a) that except for the amount, if any, of damage contributed to, caused by, or resulting from the negligence of the County, the Contractor shall indemnify and hold harmless the County, its officers, employees, agents, and elected officials from and against any and all liability, damage, claims, demands, costs, judgments, fees, attorney's fees or loss arising directly or indirectly out of the performance or failure to perform hereunder by the Contractor or third parties under the direction or control of the Contractor; and

(b) to provide defense for and defend, at its sole expense, any and all claims, demands or causes of action directly or indirectly arising out of this Agreement and to bear all other costs and expenses related thereto.

13. The Contractor agrees that any Program, public information materials, or other printed or published materials on the work of the Program which is supported with Title III-B funds will give due recognition to NYSOFA, the Westchester County Department of Senior Programs and Services, and HHS.

14. The Contractor shall be solely responsible for any over expenditure of funds and the County shall not be responsible for any over expenditure.

15. The Contractor shall provide adequate qualified and trained personnel for supervision and fiscal management of the Program.

16. The Contractor and the County agree that the Contractor and its officers, employees, agents, contractors, consultants and/or subcontractors are independent contractors and not employees of the County or any department, agency or unit thereof. In accordance with their status as independent contractors, the Contractor covenants and agrees that neither the Contractor nor any of its officers, employees, agents, contractors, consultants, and/or subcontractors will hold themselves out as, or claim to be, officers or employees of the County or any department, agency or unit thereof.

17. (a) The County, upon ten (10) days' notice to the Contractor, may terminate this Agreement in whole or in part when the County deems it to be in its best interest. In such event, the Contractor shall be compensated and the County shall be liable only for payment for services already rendered under this Agreement prior to the effective date of termination at the rates specified in Schedule "B." Upon receipt of notice that the County is terminating this Agreement in its best interests, the Contractor shall stop work immediately and incur no further costs in furtherance of this Agreement without the express approval of the Commissioner, and the Contractor shall direct any approved subcontractors to do the same.

In the event of a dispute as to the value of the work rendered by the Contractor prior to the date of termination, it is understood and agreed that the Commissioner shall determine the value of such Work rendered by the Contractor. The Contractor shall accept such reasonable and good faith determination as final.

(b) In the event the County determines that there has been a material breach by the Contractor of any of the terms of the Agreement and such breach remains uncured for forty-eight (48) hours after service on the Contractor of written notice thereof, the County, in addition to any other right or remedy it might have, may terminate this Agreement and the County shall have the right, power and authority to complete the Work provided for in this Agreement, or contract for its completion, and any additional expense or cost of such completion shall be charged to and paid by the Contractor. Without limiting the foregoing, upon written notice to the Contractor, repeated breaches by the Contractor of duties or obligations under this Agreement shall be deemed a material breach of this Agreement justifying termination for cause hereunder without requirement for further opportunity to cure.

18. Failure of the County to insist, in any one or more instances, upon strict performance of any term or condition herein contained shall not be deemed a waiver or relinquishment of such term or condition, but the same shall remain in full force and effect. Acceptance by the County of any of the Work or the payment of any fee or reimbursement due hereunder with knowledge of a breach of any term or condition hereof, shall not be deemed a waiver of any such breach and no waiver by the County of any provision hereof shall be implied.

19. If equipment costing One Thousand Dollars ($1,000) or more is purchased with any Federal or State funds provided under this Agreement, at the end of this Agreement, the County reserves the right to require that the Contractor turn the equipment over to the County. The Contractor understands, acknowledges, and agrees that it shall have no ownership interest in such equipment.

20. All notices of any nature referred to in this Agreement shall be in writing and either sent by registered or certified mail postage pre-paid, or sent by hand or overnight courier, or sent by facsimile (with acknowledgment received and a copy of the notice sent by overnight courier), to the respective addresses set forth below or to such other addresses as the respective parties hereto may designate in writing. Notice shall be effective on the date of receipt.

To the County:	Commissioner Department of Senior Programs and Services 9 South First Avenue, 10th Floor Mount Vernon, New York 10550-3414
with a copy to:	County Attorney Michaelian Office Building, Room 600 148 Martine Avenue White Plains, New York 10601
To the Contractor:	Town of Mamaroneck 740 W. Boston Post Road Mamaroneck NY 10543

21. The Contractor represents and warrants that it has not employed or retained any person, other than a bona fide full time salaried employee working solely for the Contractor, to solicit or secure this agreement, and that it has not paid or agreed to pay any person (other than payments of fixed salary to a bona fide full time salaried employee working solely for the Contractor), any fee, commission, percentage, gift or other consideration, contingent upon or resulting from the award or making of this agreement. For the breach or violation of this provision, without limiting any other rights or remedies to which the County may be entitled or any civil or criminal penalty to which any violator may be liable, the County shall have the right, in its discretion, to terminate this agreement without liability, and to deduct from the contract price, or otherwise to recover, the full amount of such fee, commission, percentage, gift or consideration.

22. This Agreement and its attachments constitute the entire Agreement between the parties with respect to the subject matter hereof and shall supersede all previous negotiations, commitments and writings. It shall not be released, discharged, changed or modified except by an instrument in writing, signed by a duly authorized representative of each of the parties.

23. The Contractor shall ensure that where the State or local public jurisdiction requires licensure or certification for the provision of social services, the Contractor and its approved subcontractors

providing such services under the approved the Plan shall be so licensed or certified. Workers delivering services must be appropriately qualified, selected trained and supervised.

24. All records or recorded data of any kind compiled by the Contractor in completing the Work described in this Agreement, including but not limited to written reports, studies, drawings, blueprints, computer printouts, graphs, charts, plans, specifications and all other similar recorded data, shall become and remain the property of the County. The Contractor may retain copies of such records for its own use and shall not disclose any such information without the express written consent of the Commissioner. The County shall have the right to reproduce and publish such records, if it so desires, at no additional cost to the County.

Notwithstanding the foregoing, all deliverables created under this Agreement by the Contractor are to be considered "works made for hire." If any of the deliverables do not qualify as "works made for hire," the Contractor hereby assigns to the County all right, title and interest (including ownership of copyright) in such deliverables and such assignment allows the County to obtain in its name copyrights, registrations and similar protections which may be available. The Contractor agrees to assist the County, if required, in perfecting these rights. The Contractor shall provide the County with at least one copy of each deliverable.

The Contractor agrees to defend, indemnify and hold harmless the County for all damages, liabilities, losses and expenses arising out of any claim that a deliverable infringes upon an intellectual property right of a third party. If such a claim is made, or appears likely to be made, the Contractor agrees to enable the County's continued use of the deliverable, or to modify or replace it. If the County determines that none of these alternatives is reasonably available, the deliverable may be returned.

25. The Contractor shall not delegate any duties or assign any of its rights under this Agreement without the prior express written consent of the County. The Contractor shall not subcontract any part of the Work without the written consent of the County, subject to any necessary legal approvals. Any purported delegation of duties, assignment of rights or subcontracting of Work under this Agreement without the prior express written consent of the County is void. All subcontracts that have received such prior written consent shall provide that subcontractors are subject to all terms and conditions set forth in this Agreement. It is recognized and understood by the Contractor that for the purposes of this Agreement, all Work performed by a County-approved subcontractor shall be deemed Work performed by the Contractor and the Contractor shall insure that such subcontracted work is subject to the material terms and conditions of this Agreement.

If the Contractor enters into subcontracts for the performance of work pursuant to this contract, the Contractor shall take full responsibility for the acts and omissions of its subcontractors. Nothing in the subcontract shall impair the rights of the County under this contract or the Area Agency Plan as approved by NYSOFA. It shall be the responsibility of the Contractor to monitor and assess the activities performed under such subcontracts, and to ensure that these activities are provided in accordance with all applicable requirements contained in this contract and federal and state law.

The Contractor agrees that, to the extent it or its subcontractors, if any, maintains personal information relating to applicants or recipients of services pursuant to the contract, such information will be kept confidential and shared with the County; or with other entities upon the consent of applicant, recipient or an authorized representative of the applicant or recipient; or as required by federal or state laws.

26. Nothing herein is intended or shall be construed to confer upon or give to any third party or its successors and assigns any rights, remedies or basis for reliance upon, under or by reason of this Agreement, except in the event that specific third party rights are expressly granted herein.

27. The Contractor recognizes that this Agreement does not grant the Contractor the exclusive right to perform the Work for the County and that the County may enter into similar agreements with other Contractors on an "as needed" basis.

28. The Contractor hereby represents that, if operating under an assumed name, it has filed the necessary certificate pursuant to New York State General Business Law Section 130.

29. All payments made by the County to the Contractor will be made by electronic funds transfer ("EFT") pursuant to the County's Vendor Direct program. If the Contractor is not already enrolled in the Vendor Direct Program, the Contractor shall fill out and submit an EFT Authorization Form as part of this Agreement. (In rare cases, a hardship waiver may be granted. For a Hardship Waiver Request Form, the Contractor understands that it must contact the County's Finance Department.) The EFT Authorization Form and related information are attached hereto and forms a part of Schedule "A." The Contractor shall provide the County with a completed EFT Authorization Form that is attached hereto and made a part hereof. If the Contractor is already enrolled in the Vendor Direct Program, the Contractor hereby agrees to immediately notify the County's Finance Department in writing if the EFT Authorization Form on file must be changed, and provide an updated paper version of the document.

30. (a) The Contractor represents and warrants that it, its principals, and affiliates (as defined in 2 C.F.R. Part 180) are not currently debarred or suspended and the Contractor agrees to complete the "Certification Regarding Debarment and Suspension," which is attached hereto and forming a part of Schedule "A." The Contractor agrees that it shall immediately notify the County if it, its principals, and/or affiliates is/are debarred or suspended, or its, its principals', and/or affiliates' debarment or suspension appears likely. The Contractor further agrees to comply, and to require its subcontractors to comply, with the debarment and suspension regulations in 2 C.F.R. Part 376, as well as the applicable requirements of 2 C.F.R. Part 180.

The Contractor represents and warrants that it is not currently excluded from receiving Federal contracts, certain subcontracts, and certain types of Federal financial and non-financial assistance and benefits, by virtue of being on the United States General Service Administration's the Excluded Parties List System (EPLS), available at http://www.sam.gov as part of the System for Awards Management (SAM). The Contractor agrees that it shall immediately notify the County if it is so-excluded, or its exclusion appears likely.

The Contractor represents and warrants that it is not currently on any debarment, suspension, or exclusion list of New York State or any political subdivision thereof, and has not been found non-responsible by New York State or any political subdivision thereof. The Contractor agrees that it shall immediately notify the County if it is added to any debarment, suspension, or exclusion list of New York State or any political subdivision thereof, or its addition to such lists appears likely. The Contractor agrees that it shall immediately notify the County if it is found non-responsible by New York State or any political subdivision thereof, or such a finding of non-responsibility appears likely.

The Contractor understands and acknowledges that the County is relying upon the Contractor's above-described representations and warranties.

Without limiting any of the foregoing, the Contractor certifies that, to the best of its knowledge and belief, it is and will be in compliance with 2 C.F.R. Part 376, regarding nonprocurrement debarment and suspension concerning public (Federal, State or local) transactions. If necessary, the Contractor will submit an explanation of why it cannot provide this certification.

(b) The Contractor agrees to complete the "Certification Regarding Drug-Free Workplace Requirements," which is attached hereto and forming a part of Schedule "A," in order to help ensure compliance with 41 U.S.C. § 8101 et seq. and 2 C.F.R. Part 382.

(c) The Contractor agrees to complete the "Certification Regarding Lobbying," which is attached hereto and forming a part of Schedule "A," in compliance with 45 C.F.R. Part 93, and to otherwise comply with 45 C.F.R. Part 93 and 31 U.S.C. § 1352.

31. This Agreement may be executed simultaneously in several counterparts, each of which shall be an original and all of which shall constitute but one and the same instrument. This Agreement shall be construed and enforced in accordance with the laws of the State of New York. In addition, the parties hereby agree that any cause of action arising out of this Agreement shall be brought in the County of Westchester.

If any term or provision of this Agreement is held by a court of competent jurisdiction to be invalid or void or unenforceable, the remainder of the terms and provisions of this Agreement shall in no way be affected, impaired, or invalidated, and to the extent permitted by applicable law, any such term, or provision shall be restricted in applicability or reformed to the minimum extent required for such to be enforceable. This provision shall be interpreted and enforced to give effect to the original written intent of the parties prior to the determination of such invalidity or unenforceability.

32. This Agreement shall not be enforceable until it is signed by both parties and approved by the Office of the County Attorney.

IN WITNESS WHEREOF, the County of Westchester and the Contractor have caused this Agreement to be executed.

THE COUNTY OF WESTCHESTER

By _____
Mae Carpenter, Commissioner
Department of Senior Programs and Services

CONTRACTOR:
Municipality: Town of Mamaroneck

By _____
(Signature)
Stephen V. Altieri
(Name)
Town Administrator
(Title)

Approved by the Board of Acquisition and Contract of the County of Westchester on the 25th day of February, 2016.

Approved as to form and manner of execution:

_____
Assistant County Attorney
The County of Westchester

ACKNOWLEDGMENT

STATE OF NEW YORK)
ss.:
COUNTY OF WESTCHESTER)

On the _____ day of _____ in the year 2016 before me, the undersigned, a Notary Public in and for said State, personally appeared Stephen V. Altieri, personally known to me or proved to me on the basis of satisfactory evidence to be the individual whose name is subscribed to the within instrument and acknowledged to me that he/she executed the same in his/her capacity, and that by his/her signature on the instrument, the individual, or the person upon behalf of which the individual acted, executed the instrument; and, acknowledged if operating under any trade name, that the certificate required by the New York State General Business Law Section 130 has been filed as required therein.

_____
Signature and Office of individual
taking acknowledgement

CERTIFICATE OF AUTHORITY
(MUNICIPALITY)

I, Christina Battalia,
(Official other than official signing contract)

certify that I am the Town Clerk of
(Title)

the Town of Mamaroneck
(Name of Municipality)

a Municipal Corporation duly organized and in good standing under the laws of the State of New York that Stephen V. Altieri
(Person executing agreement)

who signed said agreement on behalf of the Town of Mamaroneck
(Name of Municipality)

was, at the time of execution Town Administrator of the Municipal Corporation
(Title of such person)

and that said agreement was duly signed for and on behalf of said Municipal Corporation by authority of its governing board, thereunto duly authorized and that such authority is in full force and effect at the date hereof.

_____
(Signature)

STATE OF NEW YORK)
) ss.:
COUNTY OF)

On the _____ day of _____ in the year 2016 before me, the undersigned, a Notary Public in and for said State, _____ personally appeared, personally known to me or proved to me on the basis of satisfactory evidence to be the officer described in and who executed the above certificate, who being by me duly sworn did depose and say that he/she resides at _____, and he/she is an officer of said municipal corporation; that he/she is duly authorized to execute said certificate on behalf of said corporation, and that he/she signed his/her name thereto pursuant to such authority.

_____
Notary Public
Date:

WORKSESSION
ITEM 2

AMEND 2016 CAPITAL PROJECT & BUDGET - COMPUTER HARDWARE & SOFTWARE

6/15/2016 *TOWN BOARD MEETING*

CAPITAL PROJECTS FUND (FUND H):

	AMEND BUDGET:				
EXP	H.1680.0400.2016.19	COMPUTER SOFTWARE	$	138,723.00	
	H.1680.0400.2016.20	COMPUTER HARDWARE & EQUIPMENT	$	4,390.00	
REV	H.0000.5031.2016.19	TRANSFERS FROM GENERAL TOWN FUND	$	104,043.00	*A*
	H.0000.5032.2016.19	TRANSFERS FROM PART TOWN FUND	$	34,680.00	*B*
	H.0000.5031.2016.20	TRANSFERS FROM PART TOWN FUND	$	4,390.00	*B*

(CAPITAL PROJECT #2016-19)

(Increase project budget with $104,043 additional funding to be transferred from General unrestricted fund balance & $34,680 additional funding to be transferred from Part Town unrestricted fund balance.

* *Original Capital Project Budget:*	*$ 43,800.00*		
* *Funding source:*			
* *INTERFUND TRANSFERS PREVIOUSLY APPROVED*		*$ 46,005.00*	
* ***TRANSFER FR GEN TOWN FD - R.O.B. 6/15/16***		***$ 104,043.00***	***A***
* ***TRANSFER FR PART TOWN FD - R.O.B. 6/15/16***		***$ 34,680.00***	***B***
* **Revised Capital Project Budget as amended on 6/15/16:**	**$ 184,728.00**		

(CAPITAL PROJECT #2016-20)

(Increase project budget - $4,390 additional funding to be transferred fr Part Town unrestricted fund balance.

* *Original Capital Project Budget:*	*$ 87,050.00*		
* *Funding source:*			
* *INTERFUND TRANSFERS PREVIOUSLY APPROVED*		*$ 92,110.00*	
* ***TRANSFER FR PART TOWN FD - R.O.B. 6/15/16***		***$ 4,390.00***	***B***
* **Revised Capital Project Budget as amended on 6/15/16:**	**$ 96,500.00**		

GENERAL & PART TOWN FUNDS (FUND A & B):

	AMEND BUDGET:				
EXP	A.9900.9950	TRANSFER TO CAPITAL PROJECT	$	104,043.00	*A*
REV	A.0000.5995	APPROPRIATED FUND BALANCE	$	104,043.00	*A*
EXP	B.9900.9950	TRANSFER TO CAPITAL PROJECT	$	39,070.00	*B*
REV	B.0000.5995	APPROPRIATED FUND BALANCE	$	39,070.00	*B*

**** Increase (A&B) budgets with $143,113 of appropr.fund balance to be transferred to Capital Proj. #2016-19 & 2016-20***

WORKSESSION
ITEM 3

ATTACHMENT NOT AVAILABLE

WORKSESSION
ITEM 4

Town of Mamaroneck

Town Center
740 West Boston Post Road, Mamaroneck, NY 10543-3353

OFFICE OF THE TOWN ADMINISTRATOR

TEL: 914/381-7810
FAX: 914/381-7809
townadministrator@townofmamaroneck.org
www.townofmamaroneck.org

Memorandum

To: Supervisor and Town Board
Re: Update- Private Roads- Bonnie Briar Section
Date: June 9, 2016

On Thursday, June 9, David Goessl and I met with representatives of the Bonnie Briar Association in regards to the repaving of the private roads in this section of Town. There is an understanding by the Association that they would pay for the repaving since the roads were not dedicated to the Town and did not meet Town specifications. The purpose of the meeting was to decide how and when the project would take place.

The Association representatives will be proposing to their membership that the cost of the repaving and road repairs be divided equally amongst the 36 homes in the neighborhood. They expressed some concern over whether they could disseminate the information and collect the funds in time for the 2016 repaving project. Therefore they are considering a smaller road repair project and would reconsider a full repaving program for 2017. To that end, the Town will meet the Association representatives in the field and review both a repair and full repaving alternative. The repair alternative would involve what we call curb to curb patching of sections of roadway meaning the old asphalt is removed and new binder course and asphalt are installed rather than merely installing asphalt into a pothole. This alternative would be significantly less expensive and the Town would likely use its own forces for the work. The Association would still need to pay for the cost of this alternative.

The estimated cost for the full repaving project has been reduced to $111,000 rather than the original estimate of $192,000. The reduction in the estimate is based upon a re-measuring of the quantities of asphalt needed and the Association deciding that Bonnie Briar Lane does not need to be repaved. Regarding payment for the project, the Town indicated that it was willing to allow the Association to make five equal annual payments for the project. The Association has asked if a ten year plan would be considered. I indicated that the new amount is relatively small when divided between 36 homes over five years however I indicated that I would advise the Town Board of the request.

It is possible that by our meeting on June 15 there will be more information as to the next steps for the project.

Stephen V. Altieri
Town Administrator

WORKSESSION
ITEM 5

Town of Mamaroneck

Town Center

740 West Boston Post Road, Mamaroneck, NY 10543-3353

OFFICE OF THE TOWN ADMINISTRATOR

TEL: 914/381-7810
FAX: 914/381-7809
townadministrator@townofmamaroneck.org
www.townofmamaroneck.org

Memorandum

To: Supervisor and Town Board
Re: Westchester Joint Water Works (WJWW) - Macy Road Water Main Project
Date: June 10, 2016

On February 17, 2016, the Town Board held a public hearing and adopted a bonding resolution to authorize the issuance of $478,000 in serial bonds for the above referenced project including associated bonding costs. (See Attached Memorandum) The total cost at that time for the project was $2.5million. The Town's share is 18.5%.

The Town has been notified by the WJWW that as a result of further engineering analysis the project cost has increased to $5million. The second attachment is an e-mail from the WJWW outlining the reasons for the increased costs. The Town's share of the revised project cost is now increased to $925,000.

You may recall that the WJWW had submitted the original project for a New York State Clean Water Grant. The grant, if awarded, would have provided up to $1.6million toward the original project. The WJWW is re-submitting the grant application with the revised project cost which could result in up to $3million in grant funds towards the project. The grant application is due by June 20, 2016.

Since the Town has already authorized bonding for this project the recommendation is to consider a supplementary bond resolution for the difference in the project costs. The supplementary bond resolution would be in the amount of $478,700. When added to the original bonding resolution, the total authorization would be$956,700. Again the amount includes our share of the project, $925,000 plus associated bonding expenses.

However before the Town Board can consider an authorization to issue the additional bonds, a public hearing must be held since the bonding would be in a special improvement district (Water District). The third attachment is an order to call a public hearing on the bonding resolution. The Town Board's next regular meeting is July 18.

ACTION REQUESTED: THAT THE TOWN BOARD SET JULY 18 FOR A PUBLIC HEARING TO CONSIDER THE ADOPTION OF A SUPPLEMENTARY BONDING RESOLUTION IN THE AMOUNT OF $478,700 IN CONNECTION WITH THE REPLACEMENT OF THE NORTH BARRY AVENUE/MACY ROAD WATER MAIN

Stephen V. Altieri
Town Administrator

Town of Mamaroneck

Town Center
740 West Boston Post Road, Mamaroneck, NY 10543-3353

OFFICE OF THE TOWN ADMINISTRATOR

TEL: 914/381-7810
FAX: 914/381-7809
townadministrator@townofmamaroneck.org

Memorandum

To: Supervisor and Town Board
Re: Public Hearing- Water District Bond Resolution
North Barry Avenue/Macy Road Water Main Replacement

On the Town Board agenda for February 17, 2016 is a public hearing to consider the approval of a bond resolution for the replacement of a 16 inch water main between North Barry Avenue in the Village of Mamaroneck and Macy Road in the Town of Harrison. Within the Town of Mamaroneck Budget, the Water District is considered a special improvement district pursuant to New York State Statute. As such, the issuance of bonds requires that a public hearing be held to hear any and all comments regarding the proposed borrowing.

The North Barry Avenue/Macy Road water main project is part of the Westchester Joint Water Works (WJWW) 2016 Capital Project Program. The water main is essential to the water transmission system in that it provides a means for transmitting water to service the entire WJWW service area. There are two main sources of water for the WJWW water system. The North Barry Avenue water main can convey water from either source to insure continuous water service to the entire service area should there be an interruption in one of the two sources.

This is considered a joint project meaning all three communities in the WJWW participate in the cost. The total cost of the project is estimated at $2.5million. The Town's share is $462,000 (18.5%). A factor of 3.5% has been added for bond cost so the bond resolution permits a borrowing of up to $478,000.

The WJWW has applied to the New York State Environmental Finance Corporation for a grant to offset a portion of the cost of this project however a requirement of the grant is that the applicant provides evidence of having prepared for the financing of the project. Should a grant be awarded for this project our actual borrowing for the project would less.

Stephen V. Altieri
Town Administrator

Altieri, Stephen

From: David Birdsall <DBirdsall@WJWW.com>
Sent: Thursday, June 09, 2016 10:15 AM
To: Richard Slingerland; Agostino Fusco; Altieri, Stephen; Siligato, Anthony; MMacKenzie@harrison-ny.gov
Cc: Anthony Conetta
Subject: Additional information on amendment of cost estimate for WJWW: Joint Project A1310 - New 16" Water Main (Barry Ave to Macy Rd)

Importance: High

All,

Gannett Fleming (project engineer) has increased its estimate of the cost for WJWW capital project A1310: New 16" water main (Barry Ave to Macy Rd) from $2.5 million to $5.0 million. The estimated increase in cost is based upon additional site survey, underground utility and geotechnical information derived from subsurface investigations and site reviews performed since the time of the original estimate. The main drivers of the cost increase are as follows:

- Additional roadway and sidewalk restoration, including curb-to-curb pavement, based on final alignment;
- Need for full K-Crete trench backfill for paved areas and related off-site disposal of excess soil;
- Pipe jacking and utility relocation for large box culvert on Calvert St;
- Additional isolation valves;
- Additional rock excavation;
- Need for additional structural supports at Macy Road bridge crossing;
- Additional utility relocations:
    - Catch basin with 12" Storm drain on N Barry Extension;
    - Gas and water on Meadow St and Second St;
    - 18" and 12" storm drains on Third St and N Barry Ave;
    - Gas and Water on Bliss Farm St and Grove St;
    - 24" storm drain on Avondale Rd and Argyle Rd;
    - Gas and water on Calvert St and Avondale Rd;
    - Catch basin with 12" storm drain, sanitary manhole , gas and water on Calvert St and Broadway;
    - Pipe rerouting through park and up Harrison Ave, possible water (hydrant close to pathway in park) and gas

Regards,

David

David E. Birdsall
Business Director
Westchester Joint Water Works
1625 Mamaroneck Avenue
Mamaroneck, New York 10543
(914) 698-3500 Ext. 614
dbirdsall@wjww.com

At a special meeting of the Town Board of the Town of Mamaroneck, Westchester County, New York, held at the Town Hall, in Mamaroneck, New York in said Town, on the 15th day of June, 2016, at _____ o'clock ____.M., Prevailing Time.

PRESENT:

_____
Supervisor

_____
Councilman

_____
Councilman

_____
Councilman

_____
Councilman

In the Matter of The Increase and Improvement of Facilities of the Town of Mamaroneck Water District No. 1 in the Town of Mamaroneck, Westchester County, New York (Additional Costs)	ORDER CALLING PUBLIC HEARING

WHEREAS, pursuant to proceedings heretofore had and taken by the Town Board of the Town of Mamaroneck, Westchester County, New York, pursuant to the provisions of Section 202-b of the Town Law, it has been determined to be in the public interest to provide for a certain increase

and improvement of the facilities of the Town of Mamaroneck Water District No. 1 (the "Water District") in the Town of Mamaroneck, Westchester County, New York, at a maximum estimated cost of $478,700, consisting of the Town's share of the improvement of facilities of the Westchester Joint Water Works of the Town/Village of Harrison, the Village of Mamaroneck and the Town of Mamaroneck (together, "WJWW"), consisting of the construction of a 16-inch water transmission main from North Barry Avenue in Mamaroneck, New York to Macy Road in Harrison, New York, including original furnishings, equipment, machinery, apparatus, appurtenances and incidental improvements and expenses in connection therewith; and

WHEREAS, a map, plan and report including an estimate of cost has heretofore been prepared in connection therewith and is on file in the office of the Town Clerk of such Town; and

WHEREAS, in order to undertake the improvements to the aforesaid facilities as described therein, it will be necessary to expend the sum of $958,700, an increase of $480,000 over that previously authorized; and

WHEREAS, said capital project has been determined to be a Type II Action pursuant to the regulations of the New York State Department of Environmental Conservation promulgated pursuant to the State Environmental Quality Review Act ("SEQRA"), the implementation of which as proposed will not result in any significant adverse environmental impact and the documentation related to SEQRA is available in the office of the WJWW for inspection during normal office hours; and

WHEREAS, it is now desired to call a public hearing on the question of authorizing such increase and improvement of facilities of said Town of Mamaroneck Water District No. 1 at the revised maximum estimated cost; NOW, THEREFORE, IT IS HEREBY

ORDERED, by the Town Board of the Town of Mamaroneck, Westchester County, New York, as follows:

Section 1. A public hearing will be held at the Town Hall, 740 West Boston Post Road, in Mamaroneck, New York, in said Town, on the _____ day of _____, 2016, at _____ o'clock ___.M., Prevailing Time, on the question of increasing and improving the facilities of the Town of Mamaroneck Water District No. 1 in the manner described in the preambles hereof, and to hear all persons interested in the subject thereof, concerning the same, and to take such action thereon as is required or authorized by law.

Section 2. The Town Clerk is hereby authorized and directed to cause a copy of the Notice of Public Hearing hereinafter provided to be published once in the official newspaper designated for this purpose, and also to cause a copy thereof to be posted on the sign board of the Town, such publication and posting to be made not less than ten, nor more than twenty, days before the date designated for the hearing.

Section 3. The notice of public hearing shall be in substantially the form attached hereto as Exhibit A and hereby made a part hereof.

Section 4. This Order shall take effect immediately.

The question of the adoption of the foregoing Order was duly put to a vote on roll call, which resulted as follows:

_____ VOTING _____

_____ VOTING _____

_____ VOTING _____

_____ VOTING _____

_____ VOTING _____

The Order was thereupon declared duly adopted.

* * * * * * *

WORKSESSION
ITEM 6

BFJ Buckhurst Fish & Jacquemart, Inc

PLANNING
URBAN DESIGN
REAL ESTATE ANALYSIS
TRANSPORTATION
ENVIRONMENTAL ANALYSIS
DEVELOPMENT CONSULTING

November 9, 2001

Stephen Altieri, Town Administrator
Mamaroneck Town Hall
740 W. Boston Post Road
Mamaroneck, NY 10543

RE: Proposed Floor Area Ratios

Dear Steve:

The attached memorandum and chart summarizes your present residential zones in terms of the maximum square footage that one could expect in building a home. The chart then suggests a possible FAR and the resulting lower square footage that would be possible. At this point, these FARs are projections by us based upon our experience within the Town and also in other municipalities including the Village of Mamaroneck.

I think it would be good if the building department of the Town could test these potential FARs and also if the Assessor could review them. It is very important to be sure that the proposed FARs would not affect the great majority of housing within the Town of Mamaroneck. We need to be sure that the vast majority of existing homes are under the maximum size that these FARs would allow. Obviously, if this is not the case, then we would need to be more generous with the FARs.

After your building inspector and assessor get a chance to look at these could you give me a reaction to them. We can then either revise them or go ahead and produce a report for consideration by the Town Board.

Sincerely yours,

Frank S. Fish, FAICP
Principal

FF:wr

881 BROADWAY
NEW YORK NEW YORK
10003-1216
212 353 7474
FAX 353 7494

NEW YORK CITY
PITTSBURGH
STAMFORD

1. Purpose and Need

The late 1990s was a time of great economic growth in the New York Metropolitan region. Like many towns in the area during this time of economic prosperity, the Town of Mamaroneck experienced a significant upturn in its residential real estate. This partly led to the building of some homes that were considered too large for their lot sizes.

One method to control the prospect of over-building on residential properties is to adopt Floor Area Ratios (FAR) that will set the maximum square footage for residential structures. Appropriate FARs are aimed at allowing continued contextual development but preventing a home that is significantly out of scale with the neighborhood.

2. Floor Area Ratio

The Town of Mamaroneck Zoning Code defines Floor Area Ratio as the numerical value obtained by dividing the gross floor area, exclusive of cellars or basements used only for storage or utilities, within a building or buildings on a lot by the area of the lot. The figure below illustrates how floor area ratio works.

Floor area ratio is the total floor area on a zoning lot, divided by the lot area of that zoning lot.

$$FAR = \frac{\text{total floor area}}{\text{total lot area}}$$

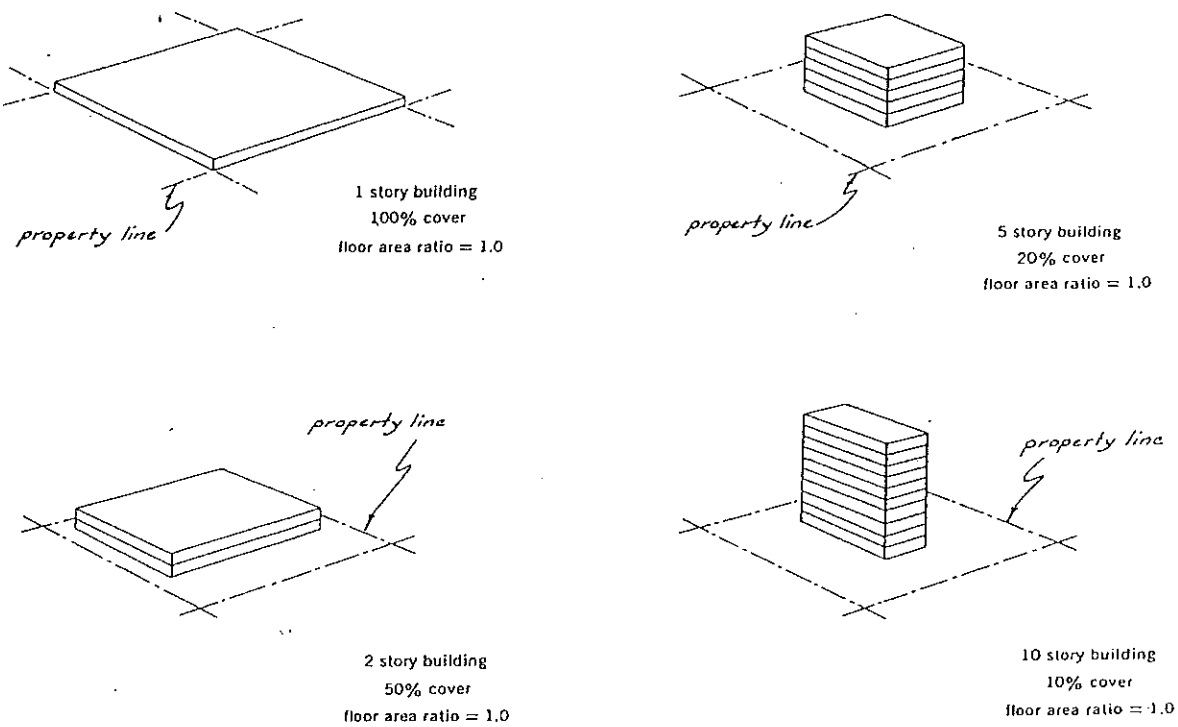

3. Existing and Proposed Controls for Residential Districts

At present, there are seven single-family residential districts ranging in lot size from 6,000 sq. ft. to 50,000 sq. ft.). These residential districts are indicated on the attached residential schedule.

The residential districts provide normal setback standards common in such districts across the United States. The purpose of these area and bulk standards has been to enhance the public good through insuring adequate land per unit, reasonable privacy and maintenance of property values.

As mentioned in the introduction, in the last few years, Fairfield County, Ct, parts of Westchester, the east end of Long Island and its North Shore have all experienced the phenomenon of new owners prepared to build the biggest house possible within the building zone. This size is controlled only by the maximum building coverage of the lot (35%). This means, for example, that on a 10,000 sq. ft. lot, a structure could cover 3,500 sq. ft. and with a 2-story house, a 7,000 sq. ft structure could be built. This is much larger than the typical older house in Mamaroneck's R-10 zone. These larger houses would clearly be out of context with the scale of existing neighborhoods.

The dilemma created in trying to solve the situation of "outsized" homes is that many existing homes could be made non-conforming if the Town changes the existing setback and yard regulations. However, applying FAR to residential structures is a new standard. As such, it should be able to control the more extreme examples of over building without interfering with the vast majority of existing residences.

Listed in the attached table is the existing maximum square footage of a house for each zone. To calculate the maximum house size, the minimum lot size was multiplied against 35% (.35), the maximum lot coverage, and then the product was multiplied against 2 stories. The table then shows the maximum house size allowed when the proposed FARs are applied. These ratios would allow most homeowners in Mamaroneck to comply with the resulting regulations. Even the smallest single-family zone in lot size (R-6) will allow a substantial house (3,300 sq. ft.).

Maximum House Sizes with Proposed Floor Area Ratios

Zone	Minimum Lot Size	Maximum Building Coverage	Lot Coverage	Maximum Square Footage (2 stories)	Proposed FAR	Maximum House Size with New FAR (sq. ft.)
R-50	50,000	35%	17,500	35,000	.25	12,500
R-30	30,000	35%	10,500	21,000	.30	8,000
R-20	20,000	35%	7,000	14,000	.35	7,000
R-15	15,000	35%	5,250	10,500	.40	6,000
R-10	10,000	35%	3,500	7,000	.45	4,500
R-7.5	7,500	35%	2,625	5,250	.50	3,750
R-6.0	6,000	35%	2,100	4,200	.55	3,300

ZONING MAP

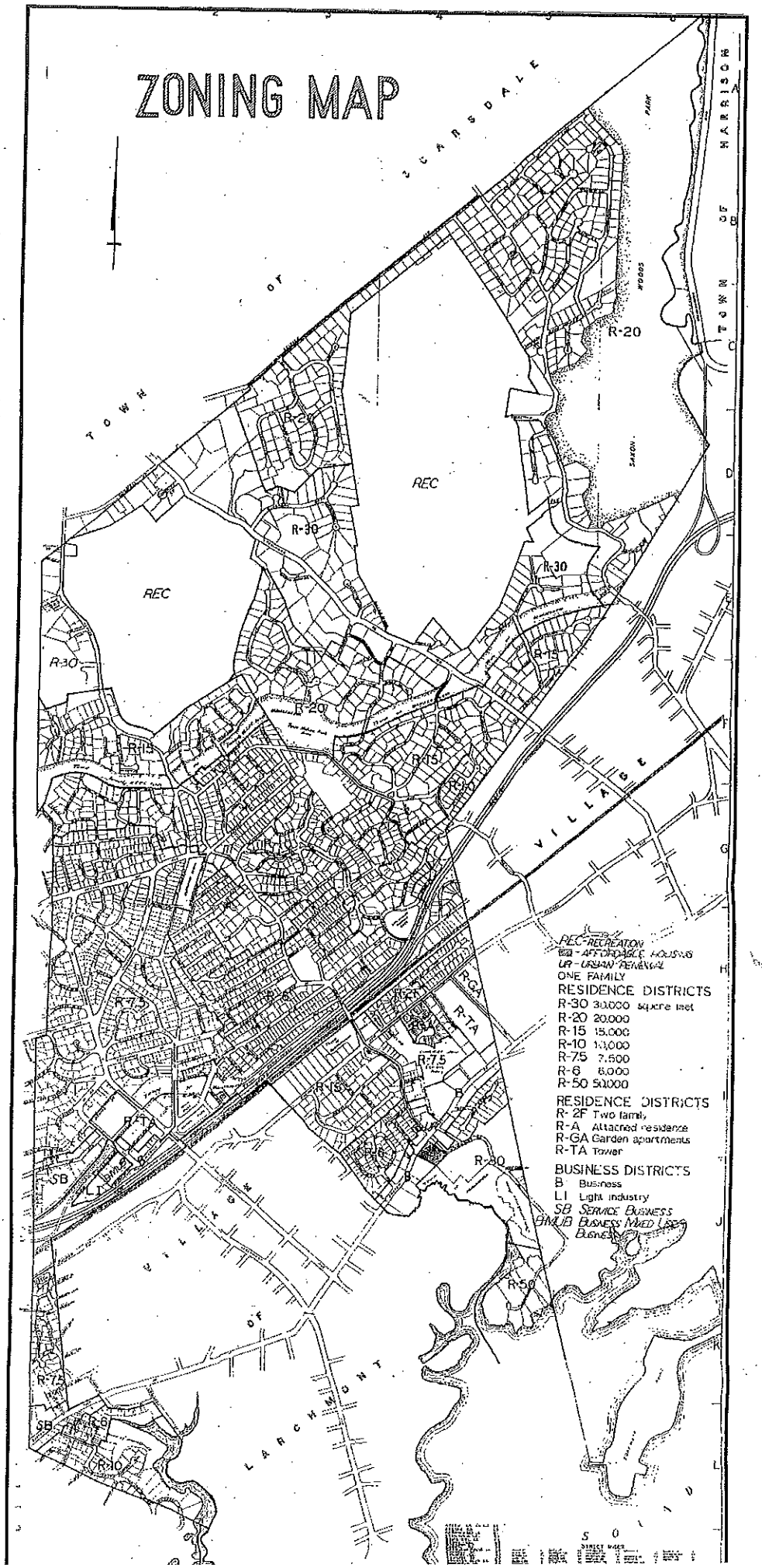
TOWN OF SCARSDALE
TOWN OF HARRISON
VILLAGE OF LARCHMONT
REC
REC
R-20
R-30
R-15
R-10
R-7.5
R-6
R-TA
R-GA
SB
LI
B
REC-RECREATION
AH - AFFORDABLE HOUSING
UR - URBAN RENEWAL
ONE FAMILY
RESIDENCE DISTRICTS
R-30 30,000 square feet
R-20 20,000
R-15 15,000
R-10 10,000
R-7.5 7,500
R-6 6,000
R-50 50,000
RESIDENCE DISTRICTS
R-2F Two family
R-A Attached residence
R-GA Garden apartments
R-TA Tower
BUSINESS DISTRICTS
B Business
LI Light industry
SB Service Business
B/LI/B Business Mixed Use Business

BFJ Buckhurst Fish & Jacquemart Inc. 115 Fifth Avenue, New York NY 10003

Tel (212) 353-7474
Fax (212) 353-7494
E-mail: bfj@peapc.com

Memorandum

To: Steve Altieri, Town Administrator

From: Frank Fish, Harlan Sexton FF

Subject: Proposed Residential Floor Area Ratios

Date: January 15, 2002

Bill Maker called to ask that we consider another approach to the oversized house issue. Bill's thinking was to require an applicant to determine the average size of a house in the immediate vicinity of the applicant's lot. Once this was ascertained he or she could apply to the building department for up to 10% above the size of the average house within a set radius.

Bill encouraged us to respond to this idea. The purpose of this memorandum is to provide that response. We suggest a two-fold process for consideration:

1. Establish Residential FARs but at a lower level than proposed previously.
2. Provide a waiver mechanism based upon Bill Maker's concept.

We have adjusted the initial proposed residential FARs (see letter dated November 9, 2001), based on our conversations with Ron Carpaneto of the Building Department. We have been able to lower the initial proposed FARs; these are shown on the next page. Mr. Carpaneto is working on determining average house size in three districts but has told us that he expects Building Department records to show that the average dwelling unit in each district is below the proposed FAR for the district, meaning that the existing homes would remain conforming even with the addition of a residential FAR.

We have also designed a process that would enable the Building Department or the Planning Board to allow a larger house if the applicant could show that the overall scale would remain the same as the scale of the neighborhood. This is attached. We recommend that an applicant have to show that the new construction would be at the same scale as homes within 100 feet of the property line. At this distance, a reasonable number of adjacent or nearby properties are compared. Within 100 feet of the lot line of an interior lot in an R-20 or R-15 district about 10 lots would be inventoried; in an R-7.5 district, about 17 lots would be inventoried. This could be further limited by requiring that only houses directly abutting (side and rear) and within 100 feet on the other side of the street be inventoried.

Table 1
Proposed Residential Floor Area Ratios
(revised January 15, 2002)

Zone	Existing Regulations				Proposed	
	Minimum Lot Size	Maximum Lot Coverage	Lot Coverage	Maximum Sq. Footage (2 stories)	Proposed FAR	Maximum Square Footage of All Bldgs On a Lot
R-50	50,000	35%	17,500	35,000	0.2	10,000
R-30	30,000	35%	10,500	21,000	0.25	7,500
R-20	20,000	35%	7,000	14,000	0.3	6,000
R-15	15,000	35%	5,250	10,500	0.35	5,250
R-10	10,000	35%	3,500	7,000	0.4	4,000
R-7.5	7,500	35%	2,625	5,250	0.45	3,375
R-6.0	6,000	35%	2,100	4,200	0.5	3,000

Proposed Residential Floor Area Ratio (FAR) Article

Purpose. This Article establishes a maximum floor area ratio (FAR) for all residential districts in the Town of Mamaroneck. The relevant FAR, in conjunction with all other applicable land use controls, will allow property owners to construct new homes or enlarge existing homes based on their household need and will allow the town to maintain overall neighborhood built character by ensuring that new homes or additions are the same or nearly the same scale as existing neighboring homes.

Maximum Floor Area Ratio. The maximum permitted floor area ratio per lot for each residential district is shown in Table 1.

Waiver Provision. The Planning Board may waive the maximum floor area ratio on a case by case basis, if the applicant demonstrates the following to the satisfaction of the Planning Board:

1. *Inventory.* The applicant shall identify all homes on all residentially-zoned lots within 100 feet of the subject site's property line. The square footage of each home shall be shown, and an average square footage shall be computed for the inventory. If more than one residential district is involved in this inventory, a separate average for each district shall be computed. The applicant shall include in the inventory a photograph of the front elevation of each house. The photographs shall be taken so that the houses can be readily compared to one another and to the proposed house or addition.
2. *Demonstration of Comparable Scale.* The applicant shall provide elevations of the proposed construction. The applicant shall demonstrate in a written statement the ways in which the proposed house or addition will be in scale with the houses identified in item 1 above.
3. *Determination by Planning Board.* The Planning Board shall determine if the proposed construction is the same scale as the houses in the inventory or, if larger, reduces the appearance of scale and so blends with the established scale and character of its neighborhood. Specific elements that the Planning Board may consider in its determination are:
    a. Roof lines and height in comparison to the existing home (if any) and to homes on adjacent lots.
    b. Location of addition (to the rear or to the side of the principal part of the house).
    c. Visibility of addition from the street and from abutting neighbors.
    d. New elevation of the house, including elevation and width of addition.
    e. Visual breaking up of front facade: is the front of the house in one plane or are there architectural features that break up the plane, such as porches, dormers, porticos, or projecting eaves, or that are set back from the main front plane?
    f. Landscaping and screening.
4. *Waiver of Maximum FAR by Planning Board.* If the applicant demonstrates to the Planning Board's satisfaction that the new construction will be in scale with the inventoried neighboring houses, the Planning Board may waive the maximum FAR as follows:
    a. The new house or addition may be as large as the average house, as determined by the inventory, plus an additional 10 percent in square footage.

Town of Mamaroneck
Town Center
740 West Boston Post Road, Mamaroneck, NY 10543-3319
914/381-7815

COUNSEL

MEMORANDUM

To: Stephen V. Altieri, Town Administrator

From: William Maker, Jr., Town Attorney

Date: September 13, 2002

Re: Latest revisions to FAR legislation

At the September 4, 2002 Town Board meeting, I was instructed to devise FAR's which would vary at1,000 square foot intervals in lot size. To do so, I prepared the annexed chart which starts with the iterations in the ratios since figures first were first presented by Frank Fish last January and gives the FAR's for the neighboring Villages of Mamaroneck and Scarsdale to afford a basis of comparison both with the earlier postulated FAR's and with the FAR's now being offered for the Board's consideration. These possible FAR's appear in the far right column of the chart.

Let me explain certain aspects of the chart.

Columns 2, 3 and 4 have blank spaces since the earlier approaches to FAR (and the method adopted by the Village of Mamaroneck) were based on a combination of zoning district and lot size. Thus, a 10,000 square foot parcel in the R-7.5 district would be governed by a .45 FAR while that same lot in the R-10 district would have to abide by the .40 FAR for that district.

Scarsdale's law and the option suggested in this memorandum compute FAR based only upon lot size.

The Village of Mamaroneck includes attics in its computation of floor area. Scarsdale includes only certain attics in its computation of floor area. Following the chart is a copy of the section of Scarsdale's law which determines which attics are included in the computation and which are not.

In developing the FAR's, I started with a .55 ratio for the smallest lots since that was the starting point in the version of the statute presented to the Town Board with my August 27 memorandum. I organized the lots in groups of 5 based on 1000 square foot increments [e.g., 6,000, 7,000, 8,000, 9,000 and 10,000 square foot lots]. I reduced the initial FAR by .03 progressively for each of the lots in the first group. Thus,

Lot Size	**FAR**
6,000	.55
7,000	.52
8,000	.49
9,000	.46
10,000	.43

The FAR for each lot in the next group of 5 was reduced by .02 from the FAR for the immediately preceding lot size, i. e. the FAR for an 11,000 square foot lot is .43 - .02 = .41.

The reductions continued within each group of 5 but the amount of each reduction diminished from group to group as follows:

by .01000 for lots between 16,000 and 20,000 square feet, then
by .00750 for the next group of 5, then
by .00500 for the next group of 5, then
by .00250 for the next group of 5, then
by .00125 for the next group of 5, then
by .00060 for the next group of 5 and finally
by .00030 for the last group of 5.

I did not compute an FAR for lots greater than 50,000 square feet in size. Assuming these proposed FAR's or some hybrid is acceptable to the Town Board, I am certain that the Board will settle on how to handle such large lots. For example, Scarsdale caps the FAR for lots that are 50,000 square feet or larger but has a special permit requirement for any house greater than 15,000 square feet in size. (As an aside, the last lot size shown on the chart that is part of the Scarsdale law is 76,230 square feet which translates into 1.75 acres).

The possible FAR's that appear in column 6 of the chart produce sizes that are somewhat larger than Scarsdale's, smaller than Mamaroneck Village's (assuming, for example, a 10,000 square foot lot in a 10,000 square foot lot zoning district) and if the same assumption is made, are between the sizes first suggested by Frank Fish and the sizes authorized under the first draft of the FAR law that was presented at the March 6 Town Board meeting.

To: Stephen V. Altieri, Town Administrator
Fm: William Maker, Jr., Town Attorney
Re: Latest revisions to FAR

The final attachment is a revised local law which incorporates the proposed FAR's and which has been further refined from the August 27, 2002 version by eliminating all references to zoning districts. Since FAR's no longer depend upon zoning districts, I also eliminated the definition of "Comparison Distance" from the law. You will recall that the parcels which can be considered in computing the "Average" are those which lie a certain distance from the "Subject Property". In the earlier versions of the statute that distance depended on the zoning district in which the "Subject Property" was located. The distance was 300 feet for the larger zoning districts and 200 feet in the smaller zoning districts. I have changed the distance to a uniform 300 feet; hence a separate definition for "Comparison Distance" no longer is needed.

1	2		3		4		5		6	
	Frank Fish's Original Presentation 01/15/02		FAR's in Original FAR Law 03/06/02		Village of Mamaroneck FAR Law (includes attics)		Village of Scarsdale FAR Law (includes some attics)		Possible FAR's For Mamaroneck (includes attics)	
Lot Size (in square feet)	FAR	Max. Size (in square feet)	FAR	Max. Size (in square feet)	FAR	Max. Size (in square feet)	FAR	Max. Size (in square feet)	FAR	Max. Size (in square feet)
1,000							None		.55	550
2,000							None		.55	1100
3,000							.43	1290	.55	1650
4,000							.43	1720	.55	2200
5,000					.60	3000	.43	2150	.55	2750
6,000	.50	3000	.45	2700	.55	3300	.414	2484	.55	3300
7,000	.45	3375	.40	3000	.50	3750	.398	2786	.52	3640
8,000	.45	3600	.40	3200	.50	4000	.382	3056	.49	3920
9,000							.366	3294	.46	4140
10,000	.40	4000	.35	3500	.45	4500	.35	3500	.43	4340
11,000							.338	3718	.41	4510
12,000							.326	3912	.39	4680
13,000							.314	4082	.37	4810
14,000							.302	4228	.35	4900
15,000	.35	5250	.30	4500	.40	6000	.29	4350	.33	4950
16,000							.284	4544	.32	5120
17,000							.2780	4726	.31	5270
18,000							.272	4896	.30	5400
19,000							.266	5054	.29	5510
20,000							.26	5200	.28	5600
21,000							.254	5334	.2725	5722.5
22,000							.248	5456	.2650	5830
23,000							.242	5566	.2575	5922.5
24,000							.236	5664	.2500	6000
25,000							.23	5750	.2425	6062.5
26,000							.224	5824	.2375	6175
27,000							.218	5886	.2325	6277.5
28,000							.212	5936	.2275	6370
29,000							.206	5974	.2225	6452.5
30,000	.25	7500	.20	6000	N/A		.20	6000	.2175	6525
31,000							.195	6061	.2150	6665
32,000							.191	6112	.2125	6800
33,000							.186	6155	.2100	6930
34,000							.182	6188	.2075	7055
35,000							.177	6213	.2050	7175
36,000							.174	6282	.20375	7335
37,000							.171	6346	.20250	7492.5

1	2		3		4		5		6	
	Frank Fish's Original Presentation 01/15/02		FAR's in Original FAR Law 03/06/02		Village of Mamaroneck FAR Law (includes attics)		Village of Scarsdale FAR Law (includes some attics)		Possible FAR's For Mamaroneck (includes attics)	
Lot Size (in Square feet)	FAR	Max Size (in square feet)	FAR	Max Size (in square feet)	FAR	Max Size (in square feet)	FAR	Max Size (in square feet)	FAR	Max Size (in square feet)
38,000							.168	6403	.20125	7647.50
39,000							.165	6455	.2000	7800
40,000							.1625	6500	.19875	7950
41,000							.160	6581	.19815	8124.15
42,000							.1585	6657	.19755	8297.10 8468.
43,000							.1565	6730	.19695	8968.85 ~~85~~ 85
44,000							.1545	6798	.19635	8639.40
45,000							.1525	6863	.19575	8808.75
46,000							.151	6946	.19545	8990.70
47,000							.149	7027	.19485 *	9352.80 **
48,000							.148	7104	.19485	9352.80
49,000							.146	7179	.19455	9532.95
50,000	.20	10,000	.15	7500	N/A		.1450	7250	.19425	9712.5
50,000+	.20		.15				.1450	**		

** Depends on size, however, for a house to be larger than 15,000 square feet a special permit is required.

* .19515 ** 9172.05

Arithmetic errors

05/10/02

(3) *Attics or Space Under a Sloping Roof.*

(a) All unfinished or finished space in an attic or under a sloping roof which has no dormers facing the front, side, or rear yards, or which have dormers or dormered porticoes that do not exceed the following dimensions shall be excluded from the calculation of FAR:

[1] For dormers facing the front or side yards, where the exterior width of such dormers do not exceed thirty percent (30%) of the exterior linear width of the roof upon which they are situated. The exterior linear width of the roof shall be measured from end to end at the widest point of the roof.

[2] For each of those dormers which face the rear yard, the distance between the side walls of the underlying story and the side wall of the dormer is greater than five (5) feet.

(b) Where the dimensions of one or more dormers exceeds one or both of the standards under paragraph (a), the total area in the attic or under the sloping roof shall be included in calculation of FAR, except as provided for in paragraph (c).

(c) That portion of unfinished or finished space in an attic or under a sloping roof where the distance between the floor and ceiling is less than four feet shall be excluded from the calculation of FAR.

SCARSDALE

Local Law No. - 2002

This local law shall be known as the "Elimination of 'McMansions' in the Town of Mamaroneck" Law.

BE IT ENACTED by the Town Board of the Town of Mamaroneck as follows:

Section 1 – Purpose.

Recently there have been a number of situations where existing homes have been demolished and new homes constructed to replace them. Though satisfying the criteria of the Town's zoning ordinance, in many cases these new homes are disproportionately larger than the homes they replace and of more significance, disproportionately larger than the other homes in the neighborhood. Similarly, additions to existing homes often result in an expanded home which is disproportionate to the other homes in the neighborhood even though the expanded homes also satisfy all of the provisions of the Town's zoning ordinance. The Town Board is aware that replacement homes that are much larger than their predecessors and their neighbors --- dubbed "McMansions" --- have become a regional phenomenon. The Town Board believes that "McMansions" are destroying the orderly appearance of the Town because their excessive sizes appear out of character with their surroundings. This is especially true in a town like Mamaroneck where most of the neighborhoods are almost fully developed. This law is designed to counteract the problem created by "McMansions".

Section 2 - Amendment to an Existing Section of the Zoning Ordinance

Section 240-4 of the Code of the Town of Mamaroneck hereby is amended by deleting the definition of FLOOR AREA RATIO and substituting the following definition of FLOOR AREA RATIO in its place:

FLOOR AREA RATIO --------- The ratio of (A) the aggregate floor area of all of the buildings on a lot, exclusive of the aggregate floor area of any basement areas regardless of their use to (B) the area of the lot on which the buildings are located.

Section 3 – The Addition of a New Section to the Zoning Ordinance.

Article VIII of the Code of the Town of Mamaroneck hereby is amended by adding the following section 240-59.1 thereto:

"Section 240- 59.1. Maximum size in the R-50, R-30, R-20, R-15, R-10, R-7.5 and R-6 Residence Districts.

A. Definitions.

"Applicant" shall mean the owner of the Subject Property. The Applicant may authorize another person to act in the Applicant's behalf.

"Average" shall mean the Total Square Footage of all of the buildings on all of the Comparison Parcels divided by the number of Comparison Parcels.

A "Comparison Parcel" shall mean any lot which (a) has a lot line that lies within 300 feet of any of the lot lines of the Subject Property and abuts one of the streets that the Subject Property abuts or (b) has a lot line which, in whole or in part, is the same as one of the lot lines of the Subject Property or (c) touches the Subject Property at any point.
"Seasonal Porch" shall mean any structure that (a) exists on the effective date of this law, (b) is attached to the dwelling on the Subject Property, (c) has a floor, a roof and structural supports, and (d) does not have permanent heating or air conditioning equipment installed therein.
"Subject Property" shall mean the lot for which a building permit is sought.

"Total Square Footage" shall mean the aggregate floor area of all of the buildings on a lot, exclusive of the aggregate floor area of any basements regardless of their use.

B. Floor Area Ratio.

(1) (a) A lot which is 6,000 square feet or less in size shall have a maximum floor area ratio of 0.55.

(b) A lot which is more than 6,000 square feet but less than 11,000 square feet in size shall have a maximum floor area ratio of 0.55 less 0.03 for every 1,000 square feet or part thereof by which such lot exceeds 6,000 square feet in size. [Maximum floor area ratio = 0.55 – (size of lot – 6,000 [rounded to the lowest 1,000] divided by 1,000) x 0.03].

(c) A lot which is more than 11,000 square feet but less than 16,000 square feet in size shall have a maximum floor area ratio of 0.41 less 0.02 for every 1,000 square feet or part thereof by which such lot exceeds 11,000 square feet in size. [Maximum floor area ratio = 0.41 – (size of lot – 11,000 [rounded to the lowest 1,000] divided by 1,000) x 0.02].

(d) A lot which is more than 16,000 square feet but less than 21,000 square feet in size shall have a maximum floor area ratio of 0.32 less 0.01 for every 1,000 square feet or part thereof by which such lot exceeds 16,000 square feet in size. [Maximum floor area ratio = 0.32 – (size of lot – 16,000 [rounded to the lowest 1,000] divided by 1,000) x 0.01].

(e) A lot which is more than 21,000 square feet but less than 26,000 square feet in size shall have a maximum floor area ratio of 0.2725 less 0.0075 for every 1,000 square feet or part thereof by which such lot exceeds 21,000 square feet in size. [Maximum floor area ratio = 0.2725 – (size of lot – 21,000 [rounded to the lowest 1,000] divided by 1,000) x 0.0075].

(f) A lot which is more than 26,000 square feet but less than 31,000 square feet in size shall have a maximum floor area ratio of 0.2375 less .005 for every 1,000 square feet or part thereof by which such lot exceeds 26,000 square feet in size. [Maximum floor area ratio = 0.2375 – (size of lot – 26,000 [rounded to the lowest 1,000] divided by 1,000) x 0.005].

g) A lot which is more than 31,000 square feet but less than 36,000 square feet in size shall have a maximum floor area ratio of 0.215 less 0.0025 for every 1,000 square feet or part thereof by which such lot exceeds 31,000 square feet in size. [Maximum floor area ratio = 0.215 – (size of lot – 31,000 [rounded to the lowest 1,000] divided by 1,000) x 0.0025].

(h) A lot which is more than 36,000 square feet but less than 41,000 square feet in size shall have a maximum floor area ratio of 0.20375 less 0.00125 for every 1,000 square feet or part thereof by which such lot exceeds 36,000 square feet in size. [Maximum floor area ratio = 0.20375 – (size of lot – 36,000 [rounded to the lowest 1,000] divided by 1,000) x 0.00125].

(i) A lot which is more than 41,000 square feet but less than 46,000 square feet in size shall have a maximum floor area ratio of 0.19815 less 0.0006 for every 1,000 square feet or part thereof by which such lot exceeds 41,000 square feet in size. [Maximum floor area ratio = 0.19815 – (size of lot – 41,000 [rounded to the lowest 1,000] divided by 1,000) x 0.0006].

(j) A lot which is more than 46,000 square feet but less than 51,000 square feet in size shall have a maximum floor area ratio of 0.19545 less 0.0003 for every 1,000 square feet or part thereof by which such lot exceeds 46,000 square feet in size. [Maximum floor area ratio = 0.19545 – (size of lot – 66,000 [rounded to the lowest 1,000] divided by 1,000) x 0.0003].

(2) The following chart illustrates the maximum floor area ratio for lots described in paragraph (B)(1) of this section.

[CHART TO BE INSERTED HERE]

C. Maximum Total Square Footage.

(1) The maximum Total Square Footage of all of the buildings on a lot shall be the greater of (a) the maximum Total Square Footage allowed when applying the maximum floor area ratio for that lot or (b) the Average.

(2) (a) If an Applicant wishes to obtain a building permit which will result in the Subject Property having buildings whose aggregate Total Square Footage exceeds the maximum Total Square Footage allowed by the floor area ratio for the Subject Property, the Applicant can compute the Average.

(b) The Applicant's computation of the Average shall be given to the town's building department. It shall be in writing and shall consist of (i) a list of all of the Comparison Parcels identified by their street addresses and their tax block and lot designations on the town's tax assessment map, (ii) the number of buildings on each Comparison Parcel, (iii) the Total Square Footage of all of the buildings on each Comparison Parcel, (iv) the sum of the Total Square Footage of all of the buildings on all of the Comparison Parcels and (v) the Average. The Applicant's architect, contractor or engineer shall certify the accuracy of the computation of the Average as correct. If there is no architect, contractor or engineer, the accuracy of the computation of the Average shall be made under oath by the Applicant.

(3) To determine the Average, the Applicant shall identify all of the Comparison Parcels by measuring the Comparison Distance from each of the lot lines of the Subject Property using the scale on the tax assessment map of the town; compute the Total Square Footage of all of the buildings on each of the Comparison Parcels by using the records of the town's building department (If the records of the town's building department do not contain sufficient information to determine the Total Square Footage of all of the buildings on any Comparison Parcel, the Applicant shall use the records of the town's assessor in order to make that determination); add the Total Square Footage of all the buildings on all of the Comparison Parcels and divide that sum by the number of Comparison Parcels.

(4) If the Average is a figure that exceeds what the maximum Total Square Footage for all of the buildings on the Subject Property would be using the maximum floor area ratio for the Subject Property, the Applicant shall be entitled to a building permit for construction which, when completed, will result in the Total Square Footage of all of the buildings on the Subject Property being greater than what the maximum floor area ratio would allow but not greater than the Average.

(5) Nothing in this section shall relieve the Applicant from satisfying all of the other requirements of this chapter and all of the requirements of every other law that must be satisfied before the town's building department may issue a building permit.

D. Applicability of this Section

(1) (a) A lot shall not be in violation of this section if the Total Square Footage of all of the buildings on that lot will be greater than the maximum Total Square Footage allowed for that lot because of construction done or to be done pursuant to a building permit issued prior to the effective date of this law.

(b) Assuming that there is compliance with all other requirements for the issuance of a building permit, a building permit shall be issued for construction based upon building plans that shall have been approved by the building department before the effective date of this law even though (i) no building permit shall have been issued before the effective date of this law and (ii) upon completion of such construction, the Total Square Footage of all of the buildings on that lot will be greater than the maximum Total Square Footage allowed for that lot.

(2) This section shall not apply to any lot (a) for which an application for a variance shall have been filed prior to the effective date of this law; provided that such application either shall have appeared on the agenda of a meeting of the Board of Appeals held prior to the effective date of this law or is scheduled to appear on the agenda for the first meeting of the Board of Appeals after the effective date of this law or (b) for which an application for an approval and/or a permit from the Planning Board shall have been filed prior to the effective date of this law; provided such application either shall have appeared on the agenda of a meeting of the Planning Board held prior to the effective date of this law or is scheduled to appear on the agenda for the first meeting of the Planning Board after the effective date of this law.

(3) This section shall apply to any lot for which an interpretation of the zoning ordinance is being requested from the Board of Appeals.

(4) An attic which exists on the effective date of this law and is not legally permitted to be used as habitable space can be converted to habitable space even though upon completion of the conversion, the maximum Total Square Footage for all of the buildings on the Subject Property will exceed the maximum allowed under this section so long as after the conversion, the exterior walls of the building in which such attic is located remain in the same position and the sum of the horizontal length of all of the alterations in the roof line on a side of the building is no longer than one-fourth (1/4) of the horizontal length of the wall beneath such roof on that side of the building.

(5) A Seasonal Porch may be permanently enclosed even though upon completion of that work, the maximum Total Square Footage for all of the buildings on the Subject Property will exceed the maximum allowed under this section so long as neither the exterior of the Seasonal Porch nor the exterior walls of the dwelling to which the Seasonal Porch is attached are relocated closer to the lot lines of the Subject Property after the permanent enclosure is completed.

Section 4 – Amendment to an Existing Section of the Zoning Ordinance.

Section 240-33 of the Code of the Town of Mamaroneck hereby is amended by adding the following paragraph thereto:

G. Maximum size. See section 240-59.1.

Section 5 – Amendment to an Existing Section of the Zoning Ordinance.

Section 240-34 of the Code of the Town of Mamaroneck hereby is amended by adding the following paragraph thereto:

G. Maximum size. See section 240-59.1.

Section 6 – Amendment to an Existing Section of the Zoning Ordinance.

Section 240-35 of the Code of the Town of Mamaroneck hereby is amended by adding the following paragraph thereto:

G. Maximum size. See section 240-59.1.

Section 7 – Amendment to an Existing Section of the Zoning Ordinance.

Section 240-36 of the Code of the Town of Mamaroneck hereby is amended by adding the following paragraph thereto:

G. Maximum size. See section 240-59.1.

Section 8 – Amendment to an Existing Section of the Zoning Ordinance.

Section 240-37 of the Code of the Town of Mamaroneck hereby is amended by adding the following paragraph thereto:

G. Maximum size. See section 240-59.1.

Section 9 – Amendment to an Existing Section of the Zoning Ordinance.

Section 240-38 of the Code of the Town of Mamaroneck hereby is amended by adding the following paragraph thereto:

G. Maximum size. See section 240-59.1.

Section 10 – Amendment to an Existing Section of the Zoning Ordinance.

Section 240-39 of the Code of the Town of Mamaroneck hereby is amended by adding the following paragraph thereto:

G. Maximum size. See section 240-59.1.

Section 11 – Severability:

Should any court of competent jurisdiction declare any provision of this Local Law invalid or unconstitutional, such declaration of unconstitutionality or invalidity shall not affect any other provisions of this Local Law, which may be implemented without the invalid or unconstitutional provisions.

Section 12 – Effective Date:

This Local Law shall become effective upon filing with the Secretary of State

PUBLIC HEARING #1

NOTICE OF PUBLIC HEARING

LEGAL NOTICE IS HEREBY GIVEN that pursuant to Section 130 of the Town Law of the State of New York, and pursuant to a resolution of the Mamaroneck Town Board adopted on June 1, 2016 a Public Hearing will be held on Wednesday, June 15, 2016 at 8:00 PM or as soon thereafter as is possible at the Town Center, 740 W. Boston Post Road, Mamaroneck, New York to consider: "Correction of an Omission to the Residential Site Plan Law" Law

Section 1 – Purpose.

On May 18, 2016, the Town Board passed Local Law No. 6 of 2016 creating a site plan review procedure for the construction of single family homes in certain defined situations. The R-15 zoning district was omitted inadvertently from the list of zoning districts to which this law is to apply. This amendment corrects that error.

The full text of this Amendment is stated below and can also be examined and copies obtained at the Town Clerk's office during regular hours, Mon-Fri, 8:30 AM to 4:30 PM, In June, July and August until 4:00 PM at 740 W. Boston Post Road Mamaroneck, NY

PLEASE TAKE FURTHER NOTICE that at the Public Hearing all persons interested will be given an opportunity to be heard and that all persons are invited to submit written comments at or prior thereto.

BY ORDER OF THE TOWN BOARD
OF THE TOWN OF MAMARONECK

CHRISTINA BATTALIA
TOWN CLERK

Published: June 6, 2016

Local Law No. - 2016

This local law shall be known as the "Correction of an Omission to the Residential Site Plan Law" Law.

BE IT ENACTED by the Town Board of the Town of Mamaroneck

Section 1 – Purpose:

On May 18, 2016, the Town Board passed Local Law No. 6 of 2016 creating a site plan review procedure for the construction of single family homes in certain defined situations. The R-15 zoning district was omitted inadvertently from the list of zoning districts to which this law is to apply. This amendment corrects that error.

Section 2 – Amendment of a current section of the Mamaroneck Code:

Section 178-4 A. (3) of the Code of the Town of Mamaroneck hereby is repealed and the following substituted in its place:

(3) Where the area of site disturbance of the parcel when divided by the area of the parcel equals or exceeds for parcels in the:

R-6 zoning district	45%
R-7.5, R-10 and R-15 zoning districts	40%
R-20, R-30 and R-50 zoning districts	35%.

Section 3 – Severability:

Should any provision of this Local Law be declared invalid or unconstitutional by any court of competent jurisdiction, such declaration of unconstitutionality or invalidity shall not affect any other provisions of this Local Law, which may be implemented without the invalid or unconstitutional provisions.

Section 4 – Effective Date:

This Local Law shall become effective upon the later of the filing with the Secretary of State or July 1, 2016.

May 27, 2016

FIRE COMMISSION

ITEM 1

Town of Mamaroneck

From: **Tony Siligato - Town Comptroller**

Re: **Fire Claims**

Date: **June 15, 2016**

The following Town of Mamaroneck Fire Department claims have been certified by Chief Noah Goldberg and submitted to the Comptroller's Office for payment:

VENDOR	DESCRIPTION		AMOUNT
AAA Emergency Supply Co	Road Flares, Hydrotest, Recharge, O-Ring Overhaul	$	352.00
AAA Emergency Supply Co	Hydrotest, Recharge, O-Ring Overhaul	$	135.00
Amazon.com	Dry Erase Markers & Board, Indoor base radio antenna	$	185.62
ASAP	Shipping charges for pagers	$	41.16
AT&T Mobility	Wireless Service for 4/12 - 5/11/16	$	360.87
Cablevision	Cable services for 5/23 - 6/22/16	$	198.04
CIT Finance, LLC	Xerox Copier Contract - May 2016	$	247.35
Con Edison	Fire HQ gas svc 04/29/16 - 05/31/16	$	193.42
Minerva Cleaners	Advanced inspection of pants, repair pockets	$	42.00
Nestle Waters North America	Rental of water coolers - May 2016	$	114.96
New England Uniform	Class A dress blouse w/pants, hat, 2 long sleeve shirts	$	437.00
R.G. Brewer	50z mag/ALU polish, 120z CLR metal cleaner, braided wire, zinc plated hanger	$	24.69
Sound Shore Pest Control	Exterminating services on 5/24/16	$	65.00
Town of Mamaroneck Fire Dept.	Shipping charges for equipment repair on 5/19/16	$	12.29
Uni First Corp.	Rug cleaning, replacement wipes, mop, clean towels 5/20 & 5/27/16	$	135.76
United Communications Corp.	4 new pagers	$	1,557.98
Villa Maria Pizza	FAST drill meal - 5/25/16	$	88.88
		$	-
		$	-
		$	-
		$	-
	Total:	**$**	**4,192.02**

FIRE COMMISSION

ITEM 2

NO ATTACHMENT

AFFAIRS OF THE TOWN

ITEM 1

Town of Mamaroneck

Town Center

740 West Boston Post Road, Mamaroneck, NY 10543-3353

OFFICE OF THE TOWN ADMINISTRATOR

TEL: 914/381-7810
FAX: 914/381-7809
townadministrator@townofmamaroneck.org
www.townofmamaroneck.org

Memorandum

To: Supervisor and Town Board
Re: Authorization- Bond Resolution
Purchase of Veterans of Foreign Wars Building
Date: June 10, 2016

Attached is a proposed bond resolution that would authorize the Town to borrow up to $2,230,000 for the purchase of the Veterans of Foreign Wars Building at 1288 Boston Post Road. The amount of the bond resolution is based upon the following:

Purchase Price	$2,150,000
Bond Expense	66,900
Contingencies	13,100
	$2,230,000

If the resolution is adopted it is subject to a permissive referendum. The referendum would occur if a petition is filed with the Town having the requisite number of signatures and following the format as required under the New York State Local Finance Law.

Also attached to this memorandum is an estimated debt schedule for the purchase of the building. The schedule is based upon the issuance of a 20 year serial bond and the current prevailing interest rates for Aa rated communities (2.28%). The average annual debt expense is estimated to be $140,000. This debt would be an expense of the Townwide Budget as it will benefit residents of the entire Town of Mamaroneck.

ACTION REQUESTED: THAT THE TOWN BOARD ADOPT THE BOND RESOLUTION AUTHORIZING THE ISSUANCE OF UP TO $2,230,000 FOR THE PURCHASE OF THE VETERANS OF FOREIGN WARS BUILDING AND RELATED BOND AND CLOSING EXPENSES.

Stephen V. Altieri
Town Administrator

BOND RESOLUTION DATED JUNE 15, 2016.

A RESOLUTION AUTHORIZING, SUBJECT TO PERMISSIVE REFERENDUM, THE ISSUANCE OF $2,230,000 BONDS OF THE TOWN OF MAMARONECK, WESTCHESTER COUNTY, NEW YORK, TO PAY THE COST OF THE ACQUISITION OF A PARCEL OF LAND AND THE BUILDING THEREON, IN AND FOR SAID TOWN.

WHEREAS, the capital project hereinafter described, as proposed, has been determined to be a Type II Action pursuant to the regulations of the New York State Department of Environmental Conservation promulgated pursuant to the State Environmental Quality Review Act, which regulations state that Type II Actions will not have any significant adverse effect on the environment; and

WHEREAS, it is now desired to authorize such capital project and the financing thereof, NOW, THEREFORE,

BE IT RESOLVED, by the affirmative vote of **not less than two-thirds of the total voting strength** of the Town Board of the Town of Mamaroneck, Westchester County, New York, as follows:

Section 1. The acquisition of a parcel of land and the building thereon, located at 1288 Boston Post Road, in the Town of Mamaroneck, Westchester County, New York, for continued senior program and other Town uses, including original furnishings, equipment, machinery, apparatus, appurtenances, and incidental improvements and expenses in connection therewith, is hereby authorized at a maximum estimated cost of $2,230,000.

Section 2. The plan for the financing of the aforesaid maximum estimated cost is by the issuance of $2,230,000 bonds of said Town, hereby authorized to be issued therefor pursuant to the provisions of the Local Finance Law.

Section 3. It is hereby determined that the period of probable usefulness of the aforesaid specific object or purpose is twenty-five years, pursuant to subdivision 94, based on subdivisions 11(b) and 21(a) of paragraph a of Section 11.00 of the Local Finance Law. It is hereby further determined that the maximum maturity of the serial bonds herein authorized **will exceed five years.**

Section 4. The faith and credit of said Town of Mamaroneck, Westchester County, New York, are hereby irrevocably pledged for the payment of the principal of and interest on such bonds as the same respectively become due and payable. An annual appropriation shall be made in each year sufficient to pay the principal of and interest on such bonds becoming due and payable in such year. There shall annually be levied on all the taxable real property of said Town, a tax sufficient to pay the principal of and interest on such bonds as the same become due and payable.

Section 5. Subject to the provisions of the Local Finance Law, the power to authorize the issuance of and to sell bond anticipation notes in anticipation of the issuance and sale of the bonds herein authorized, including renewals of such notes, is hereby delegated to the Supervisor, the chief fiscal officer. Such notes shall be of such terms, form and contents, and shall be sold in such manner, as may be prescribed by said Supervisor, consistent with the provisions of the Local Finance Law.

Section 6. All other matters, except as provided herein relating to such bonds, including determining whether to issue such bonds having substantially level or declining annual debt service and all matters related thereto, prescribing whether manual or facsimile signatures shall appear on said bonds, prescribing the method for the recording of ownership of said bonds, appointing the fiscal agent or agents for said bonds, providing for the printing and delivery of

said bonds (and if said bonds are to be executed in the name of the Town by the facsimile signature of the Supervisor, providing for the manual countersignature of a fiscal agent or of a designated official of the Town), the date, denominations, maturities and interest payment dates, place or places of payment, and also including the consolidation with other issues, shall be determined by the Supervisor. Such bonds shall contain substantially the recital of validity clause provided for in section 52.00 of the Local Finance Law and shall otherwise be in such form and contain such recitals in addition to those required by section 52.00 of the Local Finance Law, as the Supervisor shall determine.

Section 7. This resolution shall constitute a statement of official intent for purposes of Treasury Regulations Section 1.150 - 2. Other than as specified in this resolution, no monies are, or are reasonably expected to be, reserved, allocated on a long-term basis, or otherwise set aside with respect to the permanent funding of the object or purpose described herein.

Section 8. The validity of such bonds and bond anticipation notes may be contested only if:

1) Such obligations are authorized for an object or purpose for which said Town is not authorized to expend money, or

2) The provisions of law which should be complied with at the date of publication of this resolution are not substantially complied with,

and an action, suit or proceeding contesting such validity is commenced within twenty days after the date of such publication, or

3) Such obligations are authorized in violation of the provisions of the Constitution.

Section 9. Upon this resolution taking effect, the same shall be published in summary form in the official newspaper of said Town for such purpose, together with a notice of the Town Clerk in substantially the form provided in Section 81.00 of the Local Finance Law.

Section 10. **THIS RESOLUTION IS ADOPTED SUBJECT TO PERMISSIVE REFERENDUM.**

The question of the adoption of the foregoing resolution was duly put to a vote on roll call, which resulted as follows:

_____ VOTING _____

_____ VOTING _____

_____ VOTING _____

_____ VOTING _____

_____ VOTING _____

_____ VOTING _____

_____ VOTING _____

The resolution was thereupon declared duly adopted.

* * * * * *

Town of Mamaroneck

Westchester County, New York

$2,230,000 General Obligation Serial Bonds - 2016

Prevailing 'Aa' Rates plus 25 bps - 6.9.16

(*) P+I Annual Debt Svc Pymts would be approx. $140,000 per year for 20 years (*)

2.28%

Debt Service Schedule

Date	Principal	Coupon	Interest	Total P+I	Fiscal Total
07/28/2016	-	-	-	-	-
07/15/2017	95,000.00	0.880%	43,154.27	138,154.27	-
12/31/2017	-	-	-	-	138,154.27
01/15/2018	-	-	21,967.50	21,967.50	-
07/15/2018	95,000.00	1.020%	21,967.50	116,967.50	-
12/31/2018	-	-	-	-	138,935.00
01/15/2019	-	-	21,483.00	21,483.00	-
07/15/2019	95,000.00	1.170%	21,483.00	116,483.00	-
12/31/2019	-	-	-	-	137,966.00
01/15/2020	-	-	20,927.25	20,927.25	-
07/15/2020	100,000.00	1.300%	20,927.25	120,927.25	-
12/31/2020	-	-	-	-	141,854.50
01/15/2021	-	-	20,277.25	20,277.25	-
07/15/2021	100,000.00	1.420%	20,277.25	120,277.25	-
12/31/2021	-	-	-	-	140,554.50
01/15/2022	-	-	19,567.25	19,567.25	-
07/15/2022	100,000.00	1.560%	19,567.25	119,567.25	-
12/31/2022	-	-	-	-	139,134.50
01/15/2023	-	-	18,787.25	18,787.25	-
07/15/2023	100,000.00	1.680%	18,787.25	118,787.25	-
12/31/2023	-	-	-	-	137,574.50
01/15/2024	-	-	17,947.25	17,947.25	-
07/15/2024	105,000.00	1.800%	17,947.25	122,947.25	-
12/31/2024	-	-	-	-	140,894.50
01/15/2025	-	-	17,002.25	17,002.25	-
07/15/2025	105,000.00	1.930%	17,002.25	122,002.25	-
12/31/2025	-	-	-	-	139,004.50
01/15/2026	-	-	15,989.00	15,989.00	-
07/15/2026	110,000.00	2.050%	15,989.00	125,989.00	-
12/31/2026	-	-	-	-	141,978.00
01/15/2027	-	-	14,861.50	14,861.50	-
07/15/2027	110,000.00	2.170%	14,861.50	124,861.50	-
12/31/2027	-	-	-	-	139,723.00
01/15/2028	-	-	13,668.00	13,668.00	-
07/15/2028	110,000.00	2.230%	13,668.00	123,668.00	-
12/31/2028	-	-	-	-	137,336.00
01/15/2029	-	-	12,441.50	12,441.50	-
07/15/2029	115,000.00	2.290%	12,441.50	127,441.50	-
12/31/2029	-	-	-	-	139,883.00
01/15/2030	-	-	11,124.75	11,124.75	-
07/15/2030	120,000.00	2.350%	11,124.75	131,124.75	-
12/31/2030	-	-	-	-	142,249.50
01/15/2031	-	-	9,714.75	9,714.75	-

Town of Mamaroneck

Westchester County, New York

$2,230,000 General Obligation Serial Bonds - 2016

Prevailing 'Aa' Rates plus 25 bps - 6.9.16

Debt Service Schedule

Date	Principal	Coupon	Interest	Total P+I	Fiscal Total
07/15/2031	120,000.00	2.400%	9,714.75	129,714.75	-
12/31/2031	-	-	-	-	139,429.50
01/15/2032	-	-	8,274.75	8,274.75	-
07/15/2032	125,000.00	2.450%	8,274.75	133,274.75	-
12/31/2032	-	-	-	-	141,549.50
01/15/2033	-	-	6,743.50	6,743.50	-
07/15/2033	125,000.00	2.500%	6,743.50	131,743.50	-
12/31/2033	-	-	-	-	138,487.00
01/15/2034	-	-	5,181.00	5,181.00	-
07/15/2034	130,000.00	2.550%	5,181.00	135,181.00	-
12/31/2034	-	-	-	-	140,362.00
01/15/2035	-	-	3,523.50	3,523.50	-
07/15/2035	135,000.00	2.590%	3,523.50	138,523.50	-
12/31/2035	-	-	-	-	142,047.00
01/15/2036	-	-	1,775.25	1,775.25	-
07/15/2036	135,000.00	2.630%	1,775.25	136,775.25	-
12/31/2036	-	-	-	-	138,550.50
Total	**$2,230,000.00**	-	**$565,667.27**	**$2,795,667.27**	-

Yield Statistics

Bond Year Dollars	$24,809.47
Average Life	11.125 Years
Average Coupon	2.2800456%
Net Interest Cost (NIC)	2.2800456%
True Interest Cost (TIC)	2.2603635%
Bond Yield for Arbitrage Purposes	2.2603635%
All Inclusive Cost (AIC)	2.2603635%

IRS Form 8038

Net Interest Cost	2.2800456%
Weighted Average Maturity	11.125 Years

Town of Mamaroneck

Westchester County, New York

$2,230,000 General Obligation Serial Bonds - 2016

Prevailing 'Aa' Rates plus 25 bps - 6.9.16

Debt Service Schedule

Date	Principal	Coupon	Interest	Total P+I	Fiscal Total
07/15/2031	120,000.00	2.400%	9,714.75	129,714.75	-
12/31/2031	-	-	-	-	139,429.50
01/15/2032	-	-	8,274.75	8,274.75	-
07/15/2032	125,000.00	2.450%	8,274.75	133,274.75	-
12/31/2032	-	-	-	-	141,549.50
01/15/2033	-	-	6,743.50	6,743.50	-
07/15/2033	125,000.00	2.500%	6,743.50	131,743.50	-
12/31/2033	-	-	-	-	138,487.00
01/15/2034	-	-	5,181.00	5,181.00	-
07/15/2034	130,000.00	2.550%	5,181.00	135,181.00	-
12/31/2034	-	-	-	-	140,362.00
01/15/2035	-	-	3,523.50	3,523.50	-
07/15/2035	135,000.00	2.590%	3,523.50	138,523.50	-
12/31/2035	-	-	-	-	142,047.00
01/15/2036	-	-	1,775.25	1,775.25	-
07/15/2036	135,000.00	2.630%	1,775.25	136,775.25	-
12/31/2036	-	-	-	-	138,550.50
Total	**$2,230,000.00**	-	**$565,667.27**	**$2,795,667.27**	-

Yield Statistics

Bond Year Dollars	$24,809.47
Average Life	11.125 Years
Average Coupon	2.2800456%
Net Interest Cost (NIC)	2.2800456%
True Interest Cost (TIC)	2.2603635%
Bond Yield for Arbitrage Purposes	2.2603635%
All Inclusive Cost (AIC)	2.2603635%

IRS Form 8038

Net Interest Cost	2.2800456%
Weighted Average Maturity	11.125 Years

AFFAIRS OF THE TOWN

ITEM 2

ATTACHMENT NOT AVAILABLE

AFFAIRS OF THE TOWN

ITEM 3

AUTHORIZATION -

TRANSFER OF FUNDS -

TECHNOLOGY

REPAIRS/UPDATES

IS LOCATED IN THE

WORKSESSION PACKET

AFFAIRS OF THE TOWN

ITEM 4

SET PUBLIC HEARING -

WATER DISTRICT PROJECT

- MACY ROAD WATER MAIN

IS LOCATED IN THE

WORKSESSION PACKET

AFFAIRS OF THE TOWN

ITEM 5

Town of Mamaroneck
Town Center
740 West Boston Post Road, Mamaroneck, NY 10543-3353

OFFICE OF THE TOWN ADMINISTRATOR

TEL: 914/381-7810
FAX: 914/381-7809
townadministrator@townofmamaroneck.org

Memorandum

To: Supervisor & Town Board

From: Stephen V. Altieri

Subject: Authorization – Transfer of Funds – Spring Tree Planting Program

Date: June 9, 2016

Attached is information in connection with our annual spring tree planting program. It is our practice to utilize funding from the Town's Tree Trust Fund to finance the planting program.

ACTION REQUESTED THAT THE TOWN BOARD AUTHORIZE A TRANSFER OF FUNDS IN THE AMOUNT OF $7,420.00 FROM THE TOWN'S TREE TRUST FUND TO BUDGET ACCOUNT A8510.4178 FOR THE PURPOSE OF FINANCING THE 2016 SPRING TREE PLANTING PROGRAM.

Stephen V. Altieri
Town Administrator

BUDGET AMENDMENT - TRANSFER FROM TRUST FUND TO GENERAL FUND

6/15/2016 ***TOWN BOARD MEETING***

GENERAL TOWN WIDE FUND (FUND A):

INCREASE BUDGET:

A.0000.5041	TRANSFERS FROM TRUST FUND	$	7,420.00
A.8510.4178	PLANTS / TREES/ MOSQUITO CONTROL	$	7,420.00

* ***(REPRESENTS USE OF TREE PLANTING FUND DONATIONS FOR PURCHASE OF STREET TREES FOR ANNUAL SPRING PLANTING)***

* **TRUST A/C # T.0000.0097 (TREE PLANTING FUND)** $ (7,420.00)

Town of Mamaroneck

Town Center
740 West Boston Post Road, Mamaroneck, NY 10543-3353

CONSERVATION DEPARTMENT

TEL: 914/381-7845
FAX: 914/381-8473
conservationdept@townofmamaroneck.org

MEMORANDUM

To: Tony Siligato

From: Elizabeth Paul, Environmental Planner

Date: May 27, 2016

RE: ***Transfer of Funds***

Please transfer $ 7,420.00 from the Town's Tree Fund, T-97 to A-8510-4178 for the purchasing of street trees this spring. Thank you.

3082

TOWN OF MAMARONECK

REQUISITION FORM

REQUISITION NO. _____

DEPT.: Conservation Department SHIP TO: 740 W. Boston Post Road, Mamk

DATE OF REQUISITION: 05/27/16

QUANTITY	DESCRIPTION OF GOODS OR SERVICES	BUDGET CODE	UNIT PRICE	EXTENDED PRICE	RECOMMENDED VENDOR(S)
5	Prunus serr. Okame	A.8510.4178	$405.00	$2,025.00	Nature's Cradle Nursery
1	Tilia cordata 'Greenspire'	A.8510.4178	$350.00	$350.00	55 Mill Road
1	Acer rubrum 'October Glory'	A.8510.4178	$435.00	$435.00	Eastchester, NY 10709
1	Cornus. f. 'Ch. Prin.'	A.8510.4178	$209.99	$209.99	
1	dogwood Cherokee Brave	A.8510.4178	$224.99	$224.99	Requested quotes from
1	Prunus cer. Thundercloud	A.8510.4178	$299.99	$299.99	the following vendors
1	Quercus rubra	A.8510.4178	$359.99	$359.99	via email 5/11/16
2	Prunus ser. Kwanzan	A.8510.4178	$248.99	$497.98	did not receive responses
1	Planting Labor	A.8510.4178	$2,640.00	$2,640.00	
13	Gator Bags	A.8510.4178	$28.99	$376.87	Lieb's Nursery,
					Ridgeway,
					AZI Landscaping,
					Gunn Landscapes,
					& Rolling Lawns
			TOTAL:	$7,419.81	

DEPARTMENT HEAD AUTHORIZATION

REQUISITION APPROVED
TOWN ADMINISTRATOR

ORDERING COPY TO TOWN ADMINISTRATORS OFFICE

ESTIMATE

Quote expires
June 25, 2016 12:00 am

Nature's Cradle Nursery
55 Mill Road
Eastchester, NY 10709

Ticket #: 1-507672
Ticket date: 5/26/16
Station: 6

Sold to: Town Of Mamaroneck: Conservation Dept.
740 W. Boston Post Road
Mamroneck, NY 10543

Ship to:

Phone Number	914-381-7845	**Cell Number**	914-381-8473	**E-Mail**	conservationdept@townofmamroneck.or
Customer #:	102140	**Ship date:**		**Ship-via code:**	
Sls rep:	PNG	**Location:**	1	**Terms:**	Net 30 days

Quantity	Item #	Description	Price	Selling unit	Ext prc
5	102072	Prunus serr.Okame B&B 2-2.5"	$405.00	Each	2,025.00
1	111307	Tilia cord. 'Greenspire' 2-2.5	$350.00	EACH	350.00
1	105323	Acer Rubrum October Glor 2-2.5	$435.00	Each	435.00
1	111256	Cornus f. 'Ch. Prin.' 6-8' B&B	$209.99	EACH	209.99
1	107791	dogwood Cherokee Brave 7'-8'	$224.99	Each	224.99
	*** Compare at $$285.00 Discount 21.06%				
1	106774	Prunus cer.Thndrcld #15 1.5-2"	$299.99	EACH	299.99
1	111273	Quercus rubra 6-8'	$359.99	EACH	359.99
2	101685	Prunus ser. Kwanzan #20 8-10'	$248.99	Each	497.98
1.00	100047	LDD Planting Labor	$2,640.00	Each	2,640.00
13	104336	15 Gallon Treegator (Brown)	$28.99	EACH	376.87

Notes: Planting to include a one year warranty on all trees and shrubs. Planting labor is 60% of the cost of the plants. Mulch provided as a courtesy free of charge. Gator bags will be removed from quote if existing can be allocated to the new plants.

User: ER **Total line items:** 10

Sale subtotal:	7,419.81
Tax:	0.00
Total:	7,419.81

****
Total discount - You saved $ 60.01
****

All sales of live goods are final.

Thank You For Your Purchase
& Have A Wonderful Day!

5/11/16

Sent RFP to

✓ 1- Mike Nagwood ✓

✓ 2- Dennis@ Lucentecorp.com Liebs Nursery

✓ 3. ana@ridgeway gardencenter.com

✓ 4 Anthony Zavaglia

✓ 5 Nick Patrick np@gumlandscapes.com

✓ 6 Nick Contrada Rolling Lawns

Town of Mamaroneck
Spring 2016 Planting

Please provide me with an estimate for the planting of trees and shrubs at various locations throughout the Town of Mamaroneck. I have attached a list of the locations with species names, a location map and a standard tree planting detail.

Please include in your estimate:

- the cost of purchasing, delivering and planting;
- the installation of hardwood stakes and support wires only if needed;
- the purchase, installation and filling of a "gator bag" or equivalent watering system on the trees;
- restoration of the disturbed areas with mulch and grass seed as necessary;
- a one-year guarantee for the plants.

Upon award of project, the contractor must obtain a street opening permit from the Town of Mamaroneck. Fees for this permit shall be waived. Utility mark outs must be completed by the contractor before any work can begin. After planting trees, all locations must be restored with a ring of mulch around the base of the tree. Care must be taken to ensure that mulch is not placed directly against the trunk of the tree. All other disturbed areas must be reseeded with grass seed as necessary.

Estimates can be sent by fax, mail or email and must be received by 4pm on Friday, May 20th.

Elizabeth Paul
Town of Mamaroneck
Conservation Department
740 W. Boston Post Road
Mamaroneck, NY 10543
(914) 381-7845 phone
(914) 381-8473 fax
EPaul@TownOfMamaroneckNY.org

Spring 2016 Planting Locations

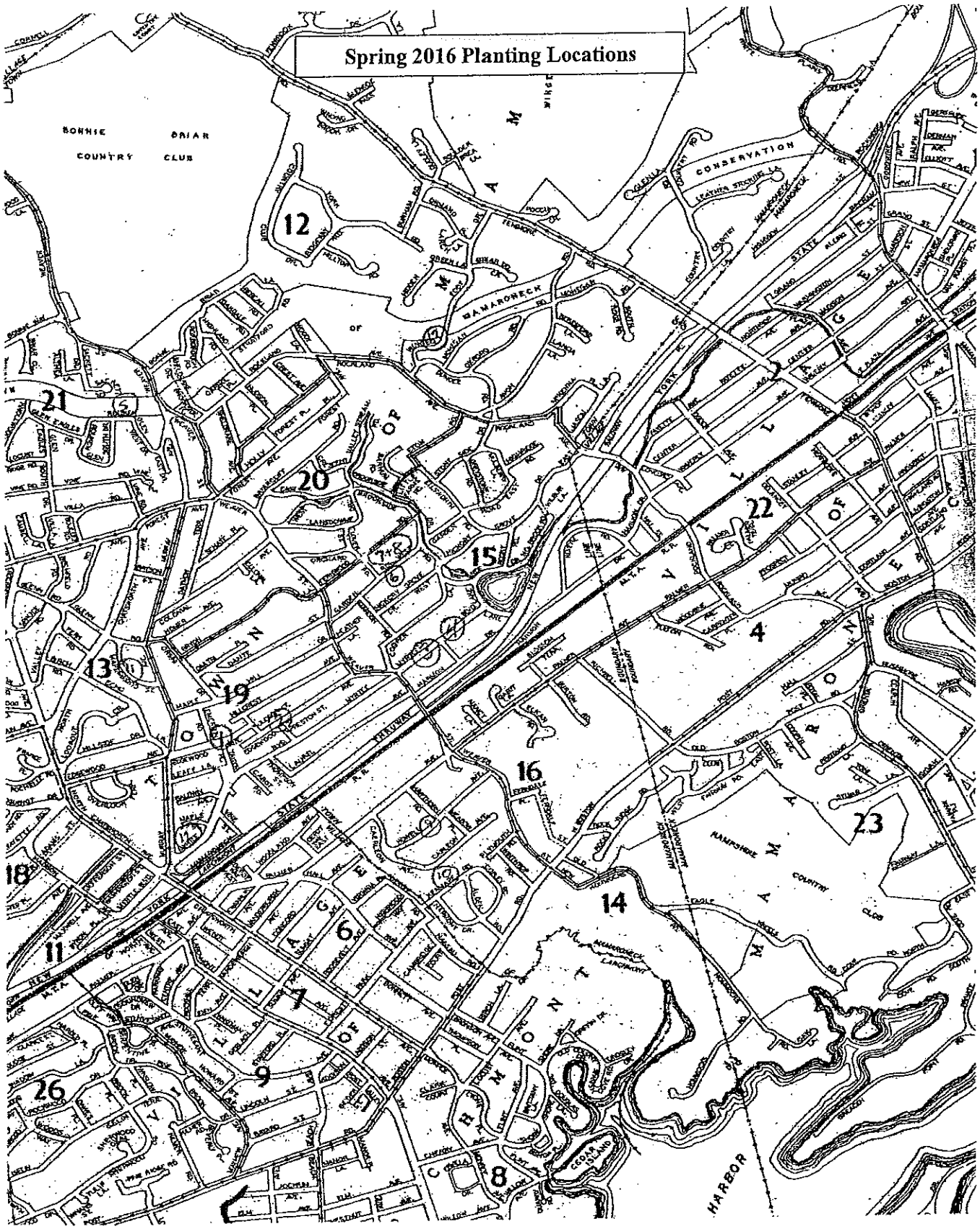

AFFAIRS OF THE TOWN

ITEM 6

Town of Mamaroneck

Town Center
740 West Boston Post Road, Mamaroneck, NY 10543-3353

AMBULANCE DISTRICT

TEL: 914/381-7838
FAX: 914/381-2010
mamkambulancedist@townofmamaroneck.org

To: Stephen Altieri
Date: June 10, 2016
From: Michael Liverzani
Re: Emergency Notification System (ENS)

Our current three-year contract with Blackboard Connect expires on July 1, 2016. Over the past few months, we have explored a number of vendors that provide ENS services. Our current contract costs $18,000 per year. The cost of providing ENS services has dropped in recent years due to increased competition among vendors and decreased technology costs.

Below please find an outline of the price quotes we have received:

Vendor	Cost Year	Comments
Blackboard Connect	$4,742	Bi-monthly data updates
Civic Plus	$6,500	Data management extra
Regroup Mass Notification	$9,940	
Swiftreach	$3,725	Bi-monthly data updates

I have had the opportunity to look at demo versions of each of these systems to compare to our current system. Swiftreach has the lowest proposed cost per year, demonstrates great customer service, and includes all of the features we expect in such a system. Locally, Bronxville and Tuckahoe currently contract with Swiftreach and New Rochelle is considering switching from Blackboard to Swiftreach. Swiftreach will assist in transitioning our current data to the new platform and provide a portal from our new website for residents to manage their contact information and choose which messages they would like to receive. We are making this proposal so the new ENS transition coincides with our new website. Therefore, I recommend we enter into a three-year contract with Swiftreach to provide ENS for the Town of Mamaroneck.

ACTION REQUESTED: TOWN BOARD APPROVE A CONTRACT WITH SWIFTREACH TO PROVIDE ENS AT AN ANNUAL COST OF $3,725.00 AND AUTHORIZE STEPHEN ALTIERI, TOWN ADMINISTRATOR, TO EXECUTE THE CONTRACT WITH SWIFTREACH

SwiftReach

Swift911™

Service Order and Agreement
Account Number: _____

Customer Information

Customer Name: **Town of Mamaroneck NY**	Notes	**Account Rep:** Chaz Garrity	**Renewal** ☐	Tax Exempt ☐
Primary Contact: **Michael Liverzani**		Billing Contact: **SAME AS PRIMARY**		
Primary Contact Email: **mliverzani@townofmamroneckny.org**		Billing Contact Email:		
Primary Contact Phone Number: **914-381-7838**		Billing Phone Number:		
Primary Contact Fax Number:		Billing Fax Number:		
Main Phone Number (BTN):		Main Fax Number:		
Corporate Address: **740 W. Boston Post Road**		Billing Address (if different):		
Room/Suite:		Room/Suite:		
City: **Mamaroneck**		City:		
State: **NY** Time Zone for Scheduled Notifications: **Est**		State:		
Zip: **10543**		Zip:		
Default Caller ID Number for *Swift*911: **914-381-7800**		**Super User:**		
Default Email From Name: **Town of Mamaroneck**		Name:		
Default Email From Address: **noreply@townofmamaroneckny.org**		Phone: **SAME AS PRIMARY**		
Default SMS From Name: **Town of Mamatoneck**		Email:		

Notification Subscription Details

Provisions	**Quantity / Cost**	**One-Time**	**Monthly**	**Annual**
Set up Fee	**N/A**		-	-
Training: ☐At Customer Site ☒ Remote via Webinar	See notes	-	-	-
Data: ☒Customer Provided ☐ SwiftReach Provided			-	-
Data Update: ☐Annually ☐ Bi-Annually ☒ Quarterly ☐N/A	-	-	-	**$0.00**
Subscription Fee: ☐Fixed ☐Pay Per Use ☒ Unlimited	-	-		**$3,725.00**
Minute Notifications: Inbound, Outbound, Fax, Conference (30 second increments)	See notes	-	-	-
SMS/Text Notifications	See notes	-	-	-
Email Notifications	Unlimited Included	-	-	-
Inbound Hotline	hotline(s) / minute	-		-
Public Web Portal (1 included, each additional $150): ☐Standard ☐ Custom ($150 per)	web portal		-	-
Term: ☐ 12 Months ☐ 24 Months ☐ 36 Months	**Totals:**	**$0.00**		**$3,725.00**

NOTES: Term start date – July 1st 2016. Three (3) year term billed annually. Subscription includes Ultd minutes text messages per year. Overage billed @ 0.00 per minute/text SMS (*inbound/outbound*). SERVICE INCLUDES UNLIMITED WEBINAR TRAINING. On-site training - $1,000.00 per day + expenses.

SwiftReach Use Only - Data Specifics: **Mamaroneck NY – Custom shape file provided by customer**

Letter of Authorization (L.O.A.) I appoint SwiftReach Networks (SNI) to act as my agent in order to effectuate the collection of account information and/or carry out the change(s) authorized on my behalf.

Emergency Notification Service known as "Services" is defined as: SNI agrees to provide an enhanced network service platform to route outbound telephone notification messages ("TNM") to those persons listed on the database ("entry" or "entries") supplied by Customer. Customer shall activate each request by telephone call (or using a web-browser) and use either a pre-recorded message, or create a new message. SNI will attempt a minimum of one call to each entry and shall retain a phone log of the connection and/or attempt to each entry. SNI log shall be made available to Customer at no cost to Customer upon the completion of each activation.

Customer shall have the ability to maintain its own database and call list on the website for no charge. Customer, in its sole discretion may edit locations from the database. SNI shall have no obligation to edit call lists, but shall be permitted to do so upon learning of any manifest errors, or omissions in performing any review of the database. Customer is fully responsible for the accuracy of the information and SNI assumes no responsibility therefore. Any corrections to initial programming shall be made, without charge, for the first thirty (30) days upon commencement of service.

Notwithstanding anything to the contrary herein, nothing in this Agreement shall be construed as a sale, transfer or license of the software and hardware employed by SNI for the TNM Service. Upon termination of the Customer's service agreement for any reason, the TNM Service shall also terminate and, other than the current listing of Customer's database that was provided by the Customer to SNI, Customer shall have no right to the return or delivery of any other information including SwiftReach provided data, software or hardware. Customer shall have no right to re-engineer any software utilized in the process and no trademark, license, trade secrets or other proprietary information controlled by SNI is intended to be conveyed hereby.

I have read and agree to each of the terms and conditions on page 2 and 3 of this Service Order and Agreement. I further authorize SwiftReach to verify any or all information provided on this application, including listed bank references, and to obtain from outside reporting agencies such credit reports as SwiftReach may deem necessary.

SwiftReach Signature _____ **Date** _____

Print Name _____ **Title** _____

Customer Signature _____ **Date** _____

Print Name _____ **Title** _____

Swift911™ EMERGENCY NOTIFICATION SERVICE ORDER AND AGREEMENT – PAGE 2 – TERMS AND CONDITIONS

SWIFTREACH NETWORKS, INC. (SwiftReach) shall provide, and Customer shall pay for, the Service indicated on page 1 of this Service Order and Agreement in accordance with the following terms and conditions:

1. EFFECTIVE DATE and TERM:

This Agreement shall become effective on the date that the Customer's signed Service Order is accepted by SwiftReach. All Service shall be provided for a Term as indicated on page 1 of this Service Order and Agreement. Such Term shall commence on the date upon which the Service is made available for use by Customer, and shall continue until the expiration of the Term or until this Agreement is otherwise terminated as set forth herein. Following the initial Term, this Agreement shall continue on an annual basis until terminated upon 30 days' prior written notice by either party hereto, or until the parties enter into a new service agreement.

2. BILLING and PAYMENT TERMS:

The fees for Service are as set forth on page 1 of this Service Order and Agreement. All calls are rated individually and rounded up to the nearest whole penny. Customer shall also be responsible for payment of any applicable local, state, or federal taxes. Where applicable, SwiftReach shall bill in advance all annual recurring charges. In the event of any dispute regarding a billing invoice, Customer shall notify SwiftReach in writing within fifteen (15) days of receipt of the invoice. Thereafter, said invoice shall be deemed to be correct and binding.

Payment is due no later than the twentieth (20th) day from the invoice date. Any amount not paid within twenty days after the invoice date shall bear interest commencing on the invoice date and continuing through the date payment is received, at a rate equal to the lesser of 1.5% per month or the highest rate permitted by law. In addition, invoices not paid by the twentieth (20th) day from the invoice date will not be eligible for quoted volume or term discounts.

Customer is responsible for paying the entire amount billed on the invoice, including reasonably disputed charges, whether or not documented in writing to SwiftReach. Any dispute resolved in Customer's favor shall be credited on Customer's next invoice. Customer shall not seek legal or equitable remedies, including without limitation, injunctive relief, which would require SwiftReach to continue providing Service to Customer while any delinquent amount payable to SwiftReach remains unpaid.

3. SERVICE and RATES:

Initial rates for the Service plan are set forth on page 1 of this Service Order and Agreement or in the separate pricing form furnished to customer. Except where otherwise required by applicable law or the provisions of this Agreement applicable to Term plans, SwiftReach may revise the rates for Service from time-to-time without prior notice. SwiftReach reserves the right to move Customer to a different Service or rate plan if usage or other criteria are not met for the plan to which Customer has subscribed or in which Customer currently is enrolled.

4. LIMITATION of LIABILITY:

Customer acknowledges that SwiftReach is not liable to Customer or to any third party for calls not completed or for any errors in transmission. SwiftReach is not liable to Customer for any act of or representation made by independent Distributors or Agents who sell SwiftReach Service, unless expressly approved by an officer of SwiftReach in writing or unless contained in a document provided by SwiftReach to Customer.

Customer recognizes the complex nature of telecommunications technology. SwiftReach shall not be responsible for any hardware/software including, but not limited to, PBX and PBX programming, CSU, DSU, channel bank, routers or any other customer-premises equipment required for any service provided by SwiftReach. Except as specifically set forth herein or in any attachment or addendum, the Service and related software and/or equipment provided by SwiftReach, if any, are provided on an "as is" and "as available" basis. Except for SwiftReach's undertaking to maintain the quality of its network consistent with prevailing industry standards and sound business practice, SWIFTREACH MAKES NO REPRESENTATIONS OR WARRANTIES OF ANY KIND WHATSOEVER, INCLUDING ANY IMPLIED WARRANTIES OF MERCHANTABILITY OR FITNESS FOR PARTICULAR PURPOSE. Certain states do not allow any limitation of implied warranties and, therefore, certain provisions may not apply to Customers located in those States. Under no circumstances shall SwiftReach have any liability for: (a) any act or omission of any connecting carrier or any underlying carrier or local exchange company whose services are resold by SwiftReach, or any other third-party provider of connections, equipment, facilities or service to Customer or SwiftReach; (b) any act or omission of Customer, its agents, servants, employees, invitees or guests; (c) any act or omission by any of Customer's end-users; or (d) any failure of equipment, facilities or connections provided by the Customer. Neither shall SwiftReach have any liability for mistakes, omissions, interruptions, errors, delays, defects in transmission or failure to transmit, when caused by acts of God, fire or other natural disaster, war, riots, labor disturbances, cable cuts, Government authorities, or any other causes beyond SwiftReach's control.

IN NO EVENT SHALL SWIFTREACH, ITS AFFILIATES OR ITS CONTRACTORS BE LIABLE FOR ANY DIRECT, INDIRECT, INCIDENTAL, SPECIAL, CONSEQUENTIAL OR PUNITIVE DAMAGES, OR FOR ANY LOST REVENUE, PROFIT, CUSTOMERS, GOODWLL OR DATA, ARISING FROM OR RELATED TO THE SERVICE, INCLUDING ERRORS, MISTAKES, OMISSIONS, INTERRUPTIONS OR DELAYS BY SWIFTREACH, ITS PROVIDERS, AGENTS, SERVANTS OR EMPLOYEES IN THE COURSE OF ESTABLISHING, FURNISHING, REARRANGING, MOVING, BILLING, TERMINATING OR CHANGING REGULATED OR NON-REGULATED SERVICES OR FACILITIES AS CONTEMPLATED HEREIN. THE FOREGOING LIMITATION OF LIABILITY SHALL APPLY WHETHER A CLAIM IS ASSERTED FOR BREACH OF WARRANTY OR ANY OBLIGATON ARISING THEREFROM, AND WHETHER A CLAIM IS ASSERTED IN CONTRACT, TORT OR STRICT PRODUCT LIABILITY, IRRESPECTIVE OF WHETHER SWIFTREACH HAS ADVISED OR BEEN ADVISED OF THE POSSBILITY OF ANY SUCH LOSS OR DAMAGE. SWIFTREACH'S LIABILITY TO CUSTOMER HEREUNDER SHALL NOT EXCEED THE LESSER OF CUSTOMER'S ACTUAL DAMAGES OR THE AVERAGE MONTHLY RECURRING CHARGE PAID BY CUSTOMER FOR THE PARTICULAR SERVICE TO WHICH THE CLAIM PERTAINS (THE "AFFECTED SERVICE"), CALCULATED FROM COMMENCEMENT OF THE AFFECTED SERVICE TO THE DATE A CLAIM IS MADE. CUSTOMER HEREBY WAIVES ANY CLAIM THAT THESE EXCLUSIONS DEPRIVE IT OF AN ADEQUATE REMEDY OR CAUSE THIS AGREEMENT TO FAIL OF ITS ESSENTIAL PURPOSE.

Customer represents and warrants that this is a commercial and business transaction, and not a consumer transaction.

5. UNAUTHORIZED USE:

The Customer shall not permit any person who is not an authorized end-user of the Swift911 Emergency Notification Service Software or any SNI outbound notification software hereunder. The Customer will not allow the Swift911 Emergency Notification Service Software or any SNI outbound notification software to be used in any manner that is a violation of State or Federal law, in particular but not limited to, laws restricting the use of Automated Calling.; such as Federal Trade Commission rules regarding automated prerecorded telephone calls under the Telemarketing Sales Rule (TSR).

6. TERMINATION:

In the event of Customer's early termination of this Agreement prior to the expiration of any fixed Term, Customer shall pay SwiftReach all charges for service provided through the effective date of such termination, plus an early termination charge in an amount equal to the greater of (a) the balance of the recurring monthly service charges for such terminated Service, which would otherwise have been payable for the unexpired balance of the term, or (b) an amount equal to the average of the prior three months usage charges, but not less than $500.00, times the remaining months of the term. It is agreed that SwiftReach's damages if Service were terminated prior to the expiration of the Term would be difficult or impossible to ascertain. Accordingly, the terms of this Paragraph 5 are intended as liquidated damages and not as a penalty in the event of early termination. Termination of Service shall not relieve Customer of its obligation to pay all fees for Service accrued and owing up to and including the date of termination or any other amount payable to SwiftReach.

7. CANCELLATION:

SwiftReach may discontinue Service or cancel an application for service, without incurring any liability, for any of the following reasons: (a) non-payment when due of any sum payable to SwiftReach for service; (b) violation of any law, rule or regulation of any governing authority having jurisdiction over the service; (c) by order of a court or other governmental or quasi-governmental authority having such jurisdiction; (d) in the event service charges exceed the amount of any deposit which SwiftReach may have required or any established credit limit; (e) if Customer provides false or misleading credit information; (f) if, in the sole discretion of SwiftReach, Customer's financial condition has deteriorated or if Customer is involved in any bankruptcy or similar proceeding; (g) fraudulent use of the Service; or (h) any material default under this Agreement including, but not limited to, violation of SwiftReach's Acceptable Use Policy, as applicable.

8. MISCELLANEOUS:

This Agreement shall be governed by and construed in accordance with the substantive and procedural laws and practices of the State of New Jersey, without reference to its principles of conflict of laws. Any action commenced hereunder shall be brought exclusively in a court of competent jurisdiction in the State of New Jersey. If a dispute arises and SwiftReach refers this Agreement to an attorney for collection, Customer shall pay all costs of collection, including interest, court costs, fees and reasonable attorney's fees. No provision of this Agreement shall be deemed waived, amended, or modified by either party unless such waiver, amendment or modification is in writing signed by the party against whom the enforcement of such waiver, amendment or modification is sought.

Swift911™ EMERGENCY NOTIFICATION SERVICE ORDER AND AGREEMENT – PAGE 3 – TERMS AND CONDITIONS

Each party represents that it has the full right, power and authority to enter into this Agreement and to perform all of the obligations on its part contemplated herein. Any notice required or permitted to be given under this Agreement shall be in writing and shall be sent by certified mail, return receipt requested, or by overnight courier, to the Customer at the address supplied on page 1 of this Service Order and Agreement, and to SwiftReach at 14 Industrial Avenue, Suite 4, Mahwah, NJ 07430, Attention: Chief Executive Officer. Either party may, at any time, notify the other of a change of address for notices, by giving written notice in accordance with this Paragraph. The terms and conditions of this Agreement shall prevail notwithstanding any variance with the terms and conditions of any order submitted by Customer or the terms of any other agreement between Customer and SwiftReach. If any provision of this Agreement is held by a court of competent jurisdiction to be contrary to law, the remaining provisions of this Agreement shall remain in full force and effect. SwiftReach may collect from Customer its costs (including reasonable attorneys' fees) incurred in enforcing this Agreement.

9. PRESS RELEASE:
SwiftReach may issue a press release announcing the general nature of the relationship between SwiftReach and Customer.

10. VERIFICATION and CREDIT APPROVAL:
Customer shall provide SwiftReach with credit information as requested. SwiftReach reserves the right to withhold initiation or implementation of Service under this Agreement pending credit review. SwiftReach may require Customer to make a deposit at any time as a condition to acceptance of any Service order submitted by Customer or as a condition to continuation of Service. Such deposit shall be held by SwiftReach as security for payment of charges, and SwiftReach may draw upon such deposit without any notice to Customer immediately when such account becomes past due. At such time as the provision of Service to Customer is terminated, the amount of any unapplied deposit shall be credited to the Customer's account and any credit balance, which may remain, shall be refunded without interest thereon. In the event Customer's order is provisioned prior to completion of verification and credit check, said provisioning shall be deemed conditional and may be canceled immediately in the event of an unsatisfactory credit report or failure on the part of Customer to provide a required deposit.

11. NO ASSIGNMENT; ENTIRE AGREEMENT:
Customer may not assign, resell, sublicense, or transfer this Agreement, whether by operation of law, or otherwise (including, but not limited to a transfer resulting from a change in control of Customer) without the prior written consent of SwiftReach, which may be withheld in its sole discretion. This Agreement shall be binding upon and insure to the benefit of the parties hereto and their respective affiliates, successors and permitted assigns. This Agreement, together with any attachments, constitute the entire Agreement and understanding between Customer and SwiftReach as to the subject hereof.

12. FAIR USAGE POLICY:
The Notification Service program is provided with the understanding that SwiftReach Networks' enhanced network service platform to route outbound telephone notification messages ("TNM") to those persons listed on the client's authorized database is done so for emergency purposes.

As stated in the NENA Minimum Standards for Emergency Telephone Notification Systems Document 56-003 dated June 12, 2004; Prepared by the National Emergency Number Association (NENA) and the Emergency Telephone Notification Systems Working Group of the Standard Operating Committee; as published by NENA, an emergency is defined under section 3.2.4 Classifying Events, as "For systems that offer the ability to classify a notification event, though it is recognized that there will be some difference in terminology between agencies and system manufacturers, emergency notification events should generally be categorized as follows:

a. Emergency Warning (eg. Approaching storm)
b. Emergency Concern (eg. Lost/missing person, amber alert)
c. Emergency Alert (eg., Escaped/at-large criminal)
d. Emergency Other (Agency defined emergency event)"

Emergency calls to phones and mobile phones and text messages included in your subscription are subject to a fair usage limit of 24 total voice and text messages combined per telephone number entered in your database for each one (1) year term. Using the formula; initial database size x 24 messages = Total Annual Messages. For example, an account with a database of 10,000 telephone numbers will have a fair usage list of 240,000 minutes / text messages per year. Once these limits are exceeded, SwiftReach will apply an overage fee per Page 1 of this Agreement.

Customer Signature _____ **Date** _____

Print Name _____ **Title** _____

AFFAIRS OF THE TOWN

ITEM 7

Town of Mamaroneck
Town Center
740 West Boston Post Road, Mamaroneck, NY 10543-3353

OFFICE OF THE TOWN ADMINISTRATOR

TEL: 914/381-7810
FAX: 914/381-7809
townadministrator@townofmamaroneck.org

Memorandum

To: Supervisor & Town Board

From: Stephen V. Altieri

Subject: Resolutions – Parking Fees – Baldwin Avenue

Date: June 10, 2016

Attached are two resolutions prepared by Counsel to establish parking fees in connection with the most recent legislation for parking on Baldwin Avenue. The first resolution establishes a $1.00 per hour parking fee for the eight metered spaces that will be established on Baldwin Avenue. The second resolution authorizes the creation of the special parking permit that will allow residents on Baldwin Avenue to utilize parking lot number one on Myrtle Boulevard.

Stephen V. Altieri
Town Administrator

Days, Hours and Cost for Parking on a Section of Baldwin Avenue

The Town Board having enacted Local Law No. 8 -2016 whereunder it can establish, by resolution, the cost for parking, the time of day when payment for parking is required and the method by which parking is paid for the 8 parking spaces on the southerly side of Baldwin Avenue that are closest to Myrtle Boulevard.

On the motion of _____, seconded by _____ it is

RESOLVED, that the Town shall erect either on Baldwin Avenue or Myrtle boulevard (in the vicinity of Baldwin Avenue) a machine to receive parking fees, or a parking meter in front of each parking space on the southerly side of Baldwin Avenue for which payment for parking is required, and be it further

RESOLVED, that

RESOLVED, that payment for parking in such spaces shall be required between the hours of 8:00 AM and 5:00 PM (prevailing time) on those Mondays, Tuesdays, Wednesdays, Thursdays and Fridays that are not a public holiday (as defined in section 24 of the NY General Construction Law).

April 15, 2016

Special Permit Parking in Parking Field No. 1 for Residents of Baldwin Avenue

Whereas, the Town Board passed Local Law No. 8-2016 establishing paid parking on a section of Baldwin Avenue and time restricted parking on the balance of Baldwin Avenue, and

Whereas, the local law may have a negative impact on those residents of Baldwin Avenue who own motor vehicles because either their properties do not have a driveway in which to park motor vehicles or they own more motor vehicles than can be parked in their driveways, and

Whereas, section 147-5 of the Code of the Town of Mamaroneck authorizes the Town Board to designate certain areas within Parking Lot No. 1 as special permit parking areas to accommodate the needs of the community.

On the motion of _____, seconded by _____ it is

RESOLVED, that the Town Board designates the entire Parking Lot No. 1 for special permit parking for residents of Baldwin Avenue, and be it further

RESOLVED, that the Town Clerk shall sell no more than 2 Special Parking Permits ("SPP") to a resident of Baldwin Avenue, and be it further

RESOLVED, that the Town Clerk shall not issue an SPP for a motor vehicle

(i) unless the owner or lessee of that motor vehicle demonstrates to the satisfaction of the Town Clerk, acting reasonably, that such owner or lessee resides on Baldwin Avenue,

(ii) for which the Town Clerk has issued a parking permit that allows that vehicle to be parked in any of the Town's parking lots or

(iii) that has or is required to have a commercial license plate,

(iv) which has three or more outstanding and unpaid parking violations against it for parking violations that occurred within the unincorporated area of the Town,

and be it further

RESOLVED, that the Town Clerk shall maintain a record of the license plate number and the vehicle identification number of each motor vehicle for which an SPP is issued, and be it further

RESOLVED, that the Town Clerk shall collect the sum of twenty-five and no/ths ($25.00) dollars for each SPP sold. Each SPP shall be valid until the last day of the first month of September that begins after such permit shall have been issued except for permits issued prior to September 30, 2016, which permits shall be valid until the last day of September 2017, and be it further

RESOLVED, that an SPP issued for a motor vehicle owned or leased by a resident of Baldwin Avenue shall be removed from such vehicle immediately if that person ceases to be a resident of Baldwin Avenue.

The above resolution was put to a roll call vote with those members of the Town Board, in attendance voting as follows:

Murphy

Elkind Eney

Katz

Odierna

Seligson

June 10, 2016

AFFAIRS OF THE TOWN

ITEM 8

Town of Mamaroneck
Town Center
740 West Boston Post Road, Mamaroneck, NY
10543-3353

Christina Battalia, CMC, RMC
Mamaroneck Town Clerk

TEL: 914/381-7870
FAX: 914/381-7813

cbattalia@townofmamaroneckNY.org

MEMORANDUM

DATE: June 9, 2016

TO: Town Board

FROM: Christina Battalia

SUBJECT: Sales of Hunting & Fishing License

I have decided to end the selling Hunting & Fishing Licenses from my Office. As you may recall I struggled with this decision a few years ago but at thetime decided to maintain sales. I have made this decision due to a decrease in staff available for these transactions, coupled with the fact that there is little to no revenue generated from this transaction. In this time of budgetary restraint, and the difficulty local governments' face working under the NYS Tax Levy Cap, it is no longer a service I can rationalize providing.

I plan on having available a list of places where customers can buy a license (these include the Archery Store on Boston Post Road, Town of Harrison, Dick's Sporting Goods as well as the County Clerk). I will have a sign outside the Building, an announcement on the web-site and Facebook, as well as an email blast.

In my request to be removed as an Issuing Agent with New York State, I was informed that I needed to provide them with a Town Board resolution. At this time I would like your approval to end the sales of Hunting & Fishing License in the Town Clerk's Office.

Christina

AFFAIRS OF THE TOWN

ITEM 9

ATTACHMENT NOT AVAILABLE